System CI - Technical Specification

Testing Methods of Electronic Connectors Follow Below Military Standards:

Dielectric Withstanding Voltage	- Per MIL-STD-1344A method 3001.1
Contact Resistance	- Per MIL-STD-1344A method 3002.1
Insulation Resistance	- Per MIL-STD-1344A method 3003.1
Solderability	- Per MIL-STD-202F method 208D

0.80mm Center spacing Wire to Board Connector

Electrical-
Current rating: 0.5 Amp max.
Dielectric Withstanding: 200 VAC for one minute
Contact Resistance: < 20 mΩ
Insulation Resistance: > 100MΩ
Operating Temperature: -25°C ~ +85°C

Physical-
Housing: Polyester , Color Nature
SMT Type Header:
High temperature plastic , Color Nature
Flammability Rating: UL 94V-0
Contacts: Copper Alloy
Contacts plating: Tin over Nickel

1.00mm Center spacing Wire to Board Connector

Electrical-
Current rating: 1 Amp max.
Dielectric Withstanding: 500 VAC for one minute
Contact Resistance: < 20 mΩ
Insulation Resistance: > 100MΩ
Operating Temperature: -25°C ~ +85°C

Physical-
Housing: Polyester , Color Nature
SMT Type Header:
High temperature plastic , Color Nature
Flammability Rating: UL 94V-0
Contacts: Copper Alloy
Contacts plating: Tin over Nickel

1.25mm and 1.50mm Center spacing Wire to Board Connector

Electrical-
Current rating: 1 Amp max.
Dielectric Withstanding: 500 VAC for one minute
Contact Resistance: < 20 mΩ
Insulation Resistance: > 100MΩ
Operating Temperature: -40°C ~ +85°C

Physical-
Housing: Polyester , Color Nature
DIP/SMT Type Header:
High temperature plastic , Color Nature
Flammability Rating: UL 94V-0
Contacts: Copper Alloy
Contacts plating: Tin over Nickel

2.00mm Center spacing Wire to Board Connector

Electrical-
Current rating: 2 Amp max.
Dielectric Withstanding: 800 VAC for one minute
Contact Resistance: < 20 mΩ
Insulation Resistance: > 100MΩ
Operating Temperature: -25°C ~ +85°C

Physical-
Housing/DIP Type Header: Nylon 66 , Color Nature
SMT Type Header:
High temperature plastic , Color Nature
Flammability Rating: UL 94V-0
Contacts: Copper Alloy
Contacts plating: Tin over Nickel

2.4mm Center spacing Wire to Board Connector

Electrical-
Current rating: 3 Amp max.
Dielectric Withstanding: 1000 VAC for one minute
Contact Resistance: < 20mΩ
Insulation Resistance: > 1000MΩ
Operating Temperature: -40°C ~ +85°C

Physical-
SMT Type Header:
High temperature plastic , Color Nature
Flammability Rating: UL 94V-0
Contacts: Copper Alloy
Contacts plating: Tin over Nickel

2.50mm and 2.54mm Center spacing Wire to Board Connector

Electrical-
Current rating: 3 Amp max.
Dielectric Withstanding: 1000 VAC for one minute
Contact Resistance: < 20mΩ
Insulation Resistance: > 1000MΩ
Operating Temperature: -25°C ~ +85°C

Physical-
Housing/DIP Type Header:
Nylon 66 or Glass Filled Polyester , Color Nature
Flammability Rating: UL 94V-0 or 94V-1 or UL94V-2
Contacts: Copper Alloy
Contacts plating: Tin over Nickel

System CI - Technical Specification

3.5mm Center spacing Wire to Board Connector

Electrical-
Current rating: 3 Amp max.
Dielectric Withstanding: 1500 VAC for one minute
Contact Resistance: < 20 mΩ
Insulation Resistance: > 1000MΩ
Operating Temperature: -25°C ~ +85°C

Physical-
SMT Type Header:
High temperature plastic , Color Nature
Flammability Rating: UL 94V-0
Contacts: Phosphor Bronze, with Tin plated
Contacts plating: Tin over Nickel

3.96mm Center spacing Wire to Board Connector

Electrical-
Current rating: 7 Amp max.
Dielectric Withstanding: 1500 VAC for one minute
Contact Resistance: < 20mΩ
Insulation Resistance: > 1000MΩ
Operating Temperature: -25°C ~ +85°C

Physical-
Housing/DIP Type Header:
Nylon 66 or Glass Filled Polyester , Color Nature
Flammability Rating: UL 94V-0 or UL94V-2
Contacts: Copper Alloy
Contacts plating: Tin over Nickel
Please see plating code for other options.

4.00mm Center spacing Wire to Board Connector

Electrical-
Current rating: 9 Amp max.
Dielectric Withstanding: 2500 VAC for one minute
Contact Resistance: < 20 mΩ
Insulation Resistance: > 1000MΩ
Operating Temperature: -35°C~+105°C

Physical-
SMT Type Header:
High temperature plastic , Color Nature
Flammability Rating: UL 94V-0
Contacts: Copper Alloy
Contacts plating: Tin over Nickel

CI20 Series 0.60mm(.024") Wire to Board Housing & SMT Headers

◎ Fixed tabs provide PCB hold-down
◎ Locking slots provide secure mating
◎ Insulator: High temperature plastic UL 94V-0, Color Black
◎ Applicable Wire: AWG #34 (Insulation O.D.: 0.32±0.02mm)

RoHS Compliant Pb HF

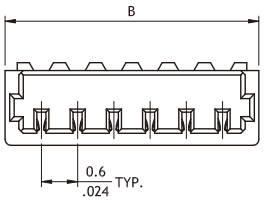

Circuits	Dim. B
6	4.2(.165)
8	4.8(.189)
10	5.4(.213)

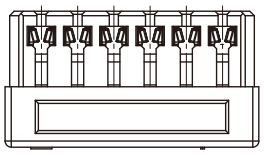

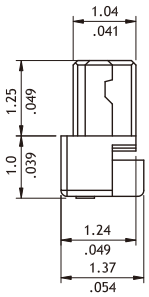

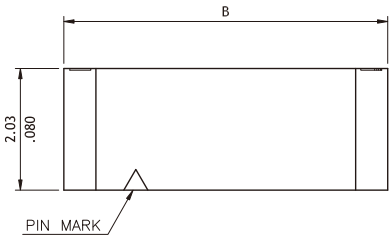

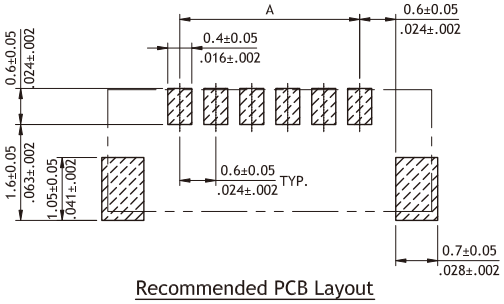

Recommended PCB Layout

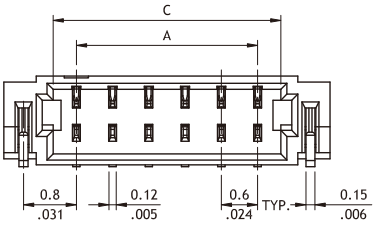

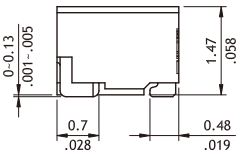

Circuits	Dimension		
	A	B	C
6	3.0(.118)	5.4(.213)	3.78(.149)
8	4.2(.165)	6.6(.260)	4.98(.196)
10	5.4(.213)	7.8(.307)	6.18(.243)

Ordering Code

① ② ③ ④ ⑤ ⑥
CI20 06 S 2 000 - NH

① Series No.
② No. of Circuits: 6, 8, 10
③ S = Housing
④ Plating Code:
2 = Gold flash over Nickel
⑤ Other Options: 000 = Standard
⑥ Process: -NH = For Halogen-Free

① ② ③ ④ ⑤ ⑥ ⑦ ⑧
CI20 06 M 2 H R 0 - NH

① Series No.
② No. of Circuits: 6, 8, 10
③ M = SMT Type
④ Plating Code: 2 = Gold flash over Nickel
⑤ Type: H = Side Entry
⑥ Packing Options:
R = Tape & Ree
⑦ Other Options:
0 = Standard
⑧ Process: -NH = For Lead Free IR process and Halogen-Free

CI18 Series 0.80mm(.031") Wire to Board Housing & SMT Headers

◎ Fixed tabs provide PCB hold-down
◎ Insulator: High temperature plastic UL 94V-0, Color Nature
◎ Housing: High temperature plastic UL 94V-0, Color Nature

RoHS Compliant

P/N	CI18**S200*-NH

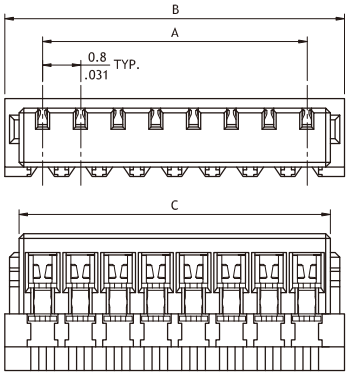

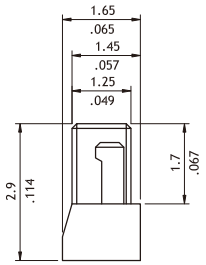

A = 0.8 x No. of Spaces
B = A + 1.6
C = A + 1.0

Wire Range	Insulation Diameter
AWG #32	0.39 mm (.015)
AWG #36	0.29 mm (.011)

P/N	CI18**M2HR0-NH

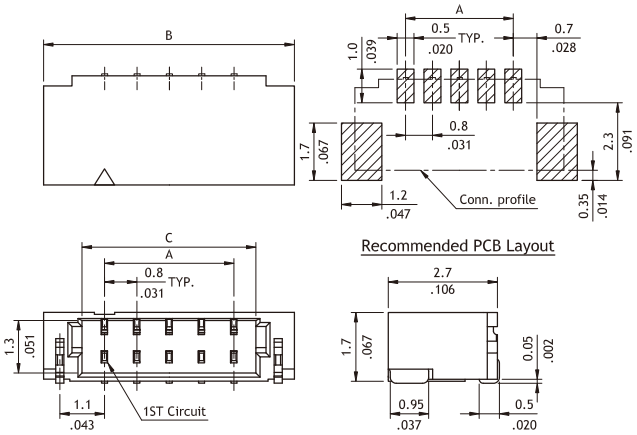

A = 0.8 x No. of Spaces
B = A + 3.0
C = A + 1.1

P/N	CI18**M2VR0-NH

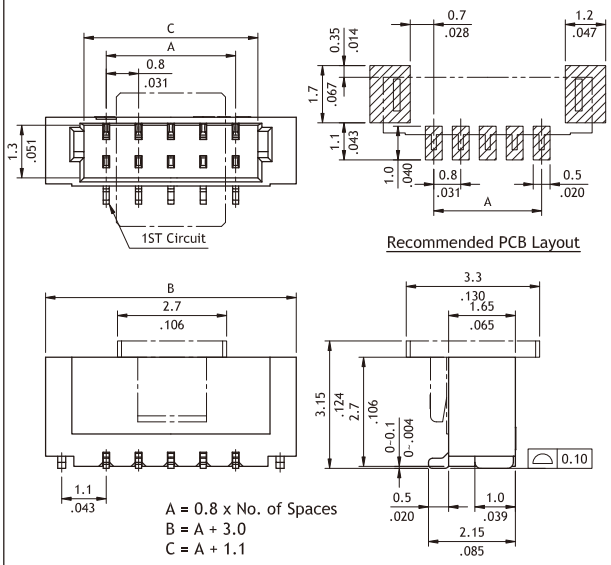

A = 0.8 x No. of Spaces
B = A + 3.0
C = A + 1.1

Ordering Code

① ② ③ ④ ⑤ ⑥

CI18 15 S 2 000 - NH

① Series No.
② No. of Circuits: 02 to 15
③ S = Housing
④ Plating Code:
1 = Matte Tin over Nickel
2 = Gold flash over Nickel
⑤ Other Options: 000 = AWG #32(Standard)
00A = AWG #36
⑥ -NH = For Halogen-Free

① ② ③ ④ ⑤ ⑥ ⑦ ⑧

CI18 15 M 2 H R 0 - NH

① Series No.
② No. of Circuits: 02 to 15
③ M = SMT Type
④ Plating Code: 1 = Matte Tin plated over Nickel
2 = Gold flash over Nickel
⑤ Type: V = Top Entry ; H = Side Entry
⑥ Packing Options: R = Tape & Reel
⑦ Other Options: 0 = Standard
⑧ Process: -NH = For Lead Free IR process and Halogen-Free

CI11 Series 1.00mm(.039") Single Row Wire to Board Housing & Terminal

- ◎ Insulator: Polyester UL 94V-0, Color Nature
- ◎ Terminal: Tin plated, Phosphor Bronze
- ◎ Mate with CI11 headers
- ◎ Compact design
- ◎ Protrusions design for easy pull out

RoHS Compliant HF

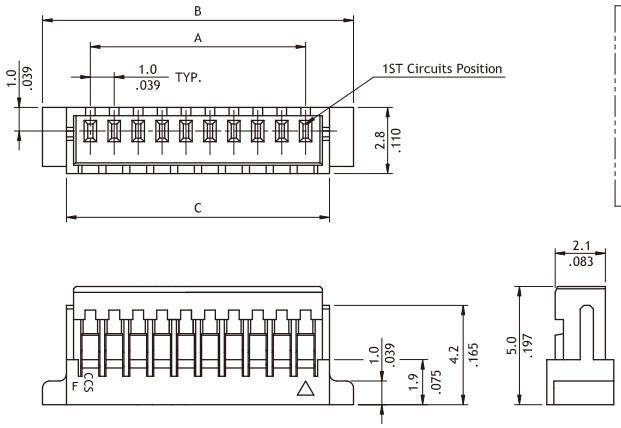

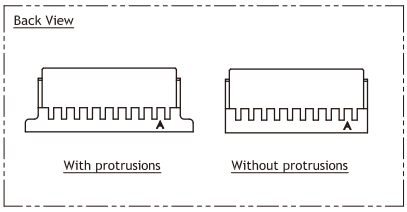

A = 1.0 x No. of Spaces
B = A + 4.0
C = A + 2.0

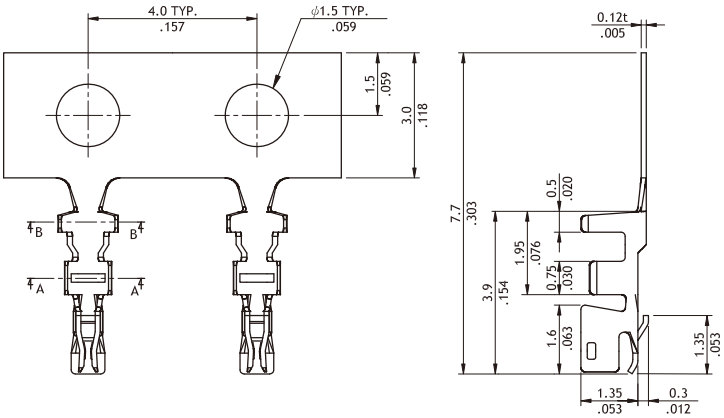

Wire Range	Insulation Diameter	Reel Q'ty
AWG #28~#32	0.4~0.8(mm) (.016~.031)	16,000 PCS

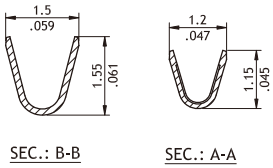

SEC.: B-B SEC.: A-A

Ordering Code

① ② ③ ④ ⑤ ⑥

CI11 15 S 000 0 - NH

① Series No.
② No. of Circuits: 02 to 15, 18, 20, 26
③ S = Housing
④ 000 = With Protrusions
N00 = Without Protrusion
⑤ Other Options: 0 = Standard
*Special options consult manufacturer
⑥ Process: -NH = For Halogen-Free

① ② ③ ④ ⑤

CI11 T01 1 P P0

① Series No.
② Type: T01 = AWG #28 ~ #32
③ Plating Code:
1 = Tin over Nickel
④ Material:
P = Phosphor Bronze
⑤ Other Options: P0 = Standard

CI11 Series 1.00mm(.039") Single Row Wire to Board SMT Headers

- ◎ Polarization and Low-profile
- ◎ Locking slots provide secure mating
- ◎ Fixed tabs provide PCB hold-down
- ◎ Mate with CI11 housing
- ◎ With Tin plated SMT type contact

RoHS Compliant

Top Entry

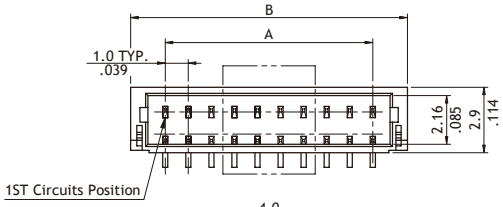

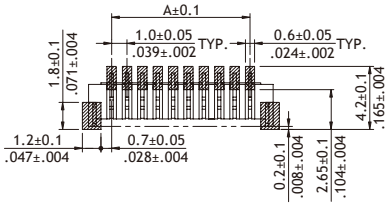

Recommended PCB Layout

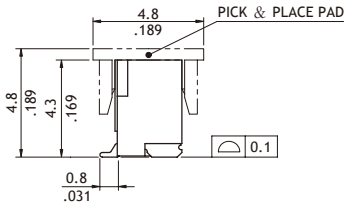

Side Entry

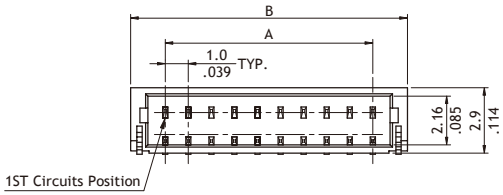

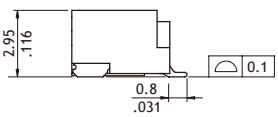

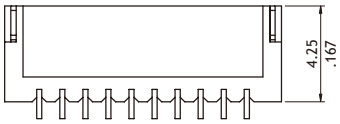

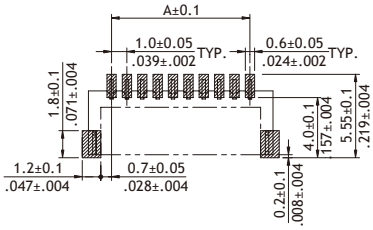

Recommended PCB Layout

Circuits	Dimension	
	A	B
2	1.0(.039)	4.0(.157)
3	2.0(.079)	5.0(.197)
4	3.0(.118)	6.0(.236)
5	4.0(.157)	7.0(.276)
6	5.0(.197)	8.0(.315)
7	6.0(.236)	9.0(.354)
8	7.0(.276)	10.0(.394)
9	8.0(.315)	11.0(.433)
10	9.0(.354)	12.0(.472)
11	10.0(.394)	13.0(.512)
12	11.0(.433)	14.0(.551)
13	12.0(.472)	15.0(.591)
14	13.0(.512)	16.0(.630)
15	14.0(.551)	17.0(.669)
18	17.0(.669)	20.0(.787)
20	19.0(.748)	22.0(.866)
26	25.0(.984)	28.0(1.102)

Ordering Code

①	②	③	④	⑤	⑥		⑦
CI11	15	M	1	V	R0	-	NH

① Series No.
② No. of Cirsuits:
02 to 15, 18, 20, 26
③ M = SMT Type
④ Plating Code: 1 = Matte Tin over Nickel

⑤ Type: V = Top Entry
H = Side Entry
⑥ Packing Options:
R0 = Tape & Reel
(Top entry type with pick & place pad)
T0 = Tube

⑦ Process: -LF = For Lead Free soldering process
-NH = For Lead Free soldering process and Halogen-Free

CI11 Series 1.00mm(.039") Dual Row Wire to Board Housing & Terminal

- ◎ Insulator: Polyester UL 94V-0, Color Nature
- ◎ Terminal: Tin plated, Phosphor Bronze
- ◎ Mate with CI11 headers
- ◎ Compact design
- ◎ Protrusions design for easy pull out

RoHS Compliant HF

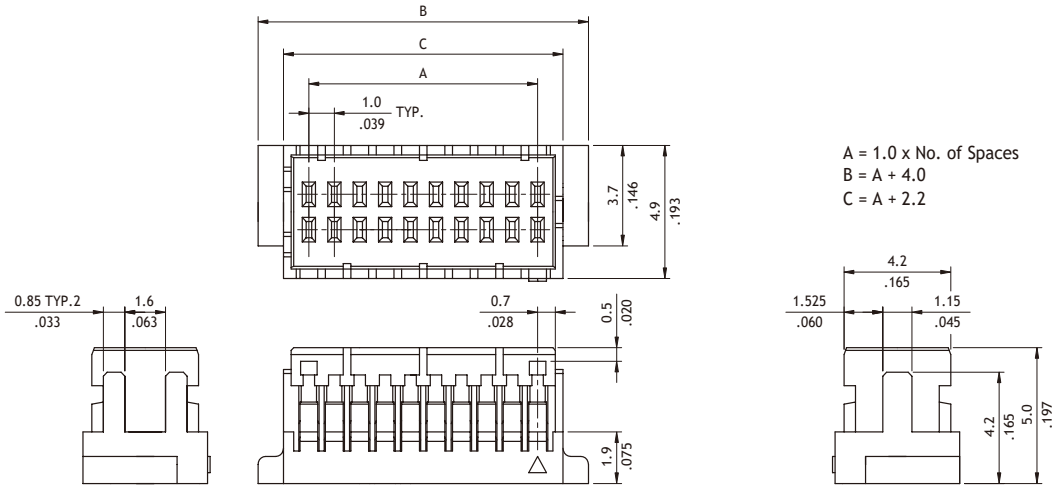

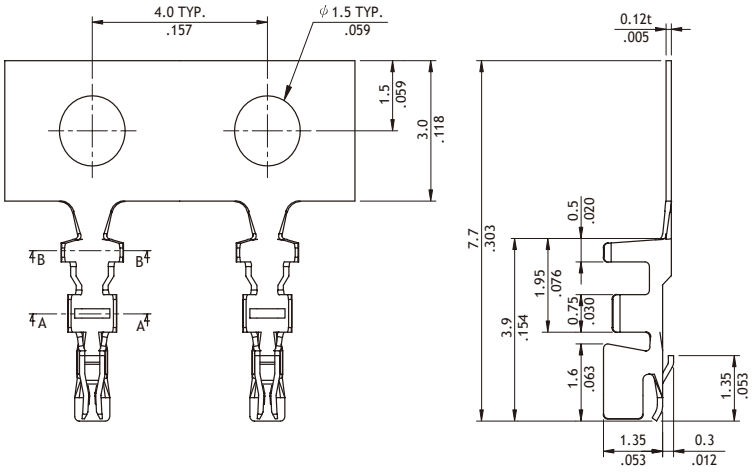

Wire Range	Insulation Diameter	Reel Q'ty
AWG #28-#32	0.4-0.8(mm) (.016-.031)	16,000 PCS

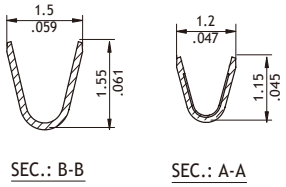

Ordering Code

① ② ③ ④ ⑤ ⑥

C I 1 1 | 5 0 | S | D | 0 0 0 | - | NH

① Series No.
② No. of Circuits: 14, 16, 20, 30, 40, 50
③ S = Housing
④ D=Dual Row Type
⑤ Other Options: 000 = Standard
*Special options consult manufacturer
⑥ Process: -NH = For Halogen-Free

① ② ③ ④ ⑤

C I 1 1 | T01 | 1 | P | P H

① Series No.
② Type:T01= AWG #28~#32
③ Plating Code: 1= Tin over Nickel
④ Material: P=Phosphor Bronze
⑤ Other Option:
PH= Low Single contact force

CI11 Series 1.00mm(.039") Dual Row Wire to Board SMT Headers

- ◎ Polarization and Low-profile
- ◎ Locking slots provide secure mating
- ◎ Fixed tabs provide PCB hold-down
- ◎ With Tin plated SMT type contact

RoHS Compliant

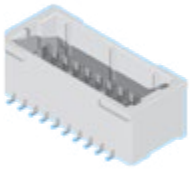

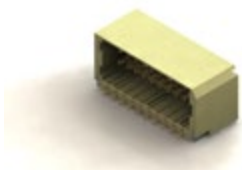

Top Entry

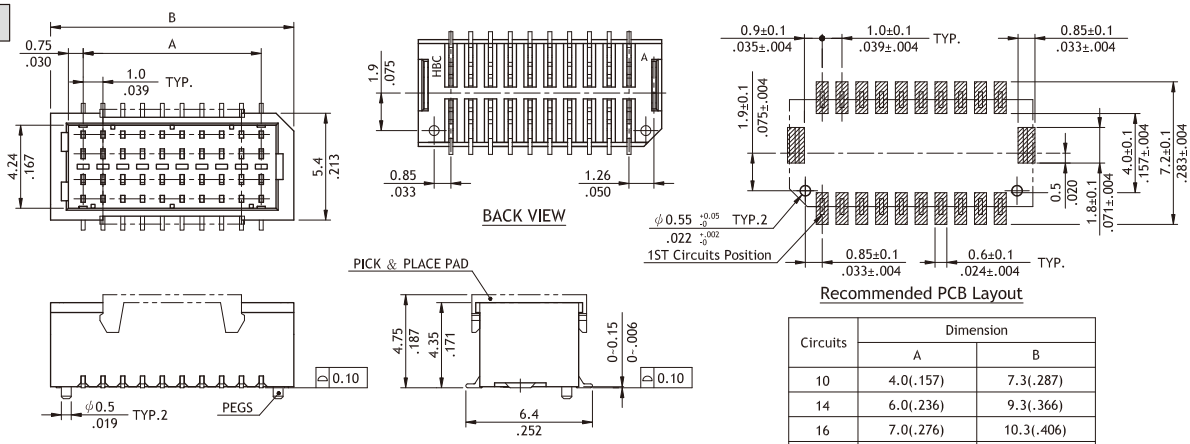

Circuits	Dimension	
	A	B
10	4.0(.157)	7.3(.287)
14	6.0(.236)	9.3(.366)
16	7.0(.276)	10.3(.406)
20	9.0(.354)	12.3(.484)
30	14.0(.511)	17.3(.681)
40	19.0(.748)	22.3(.878)
50	24.0(.945)	27.3(1.075)

Side Entry

Circuits	Dimension	
	A	B
12	5.0(.197)	8.3(.327)
16	7.0(.276)	10.3(.406)
18	8.0(.315)	11.3(.445)
20	9.0(.354)	12.3(.484)
30	14.0(.551)	17.3(.681)
40	19.0(.748)	22.3(.878)
50	24.0(.945)	27.3(1.075)

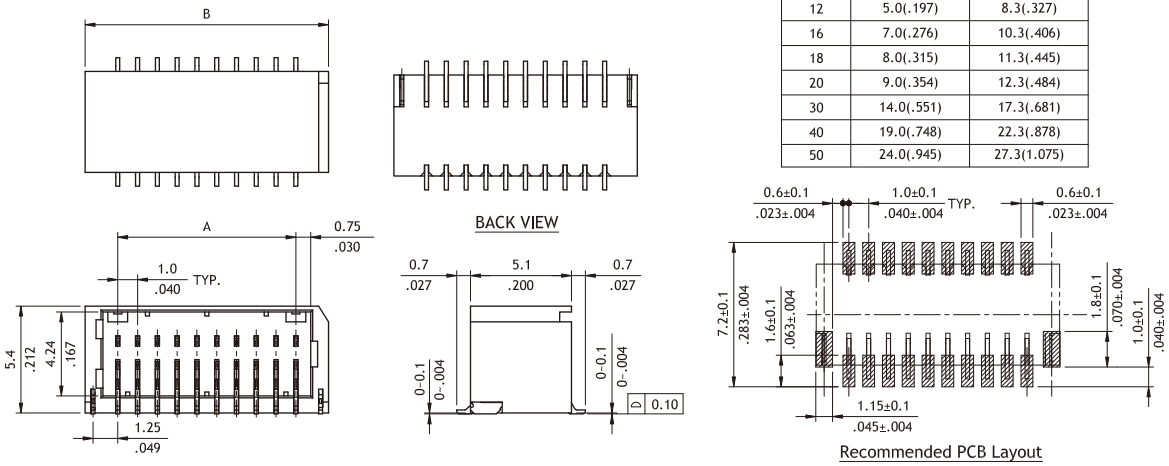

Ordering Code

①	②	③	④	⑤	⑥	⑦		⑧		⑨
CI11	50	M	2	V	D	0	-	R0	-	NH

① Series No.
② No. of Cirsuits:
Top Entry: 10,14,16,20,30,40,50
Side Entry: 12,16,18,20,30,40,50
③ M = SMT Type
④ Plating Code:
2 = Gold flash over Nickel

⑤ Type: V = Top Entry
H = Side Entry
⑥ D = Dual Row type
⑦ Pegs Options:
Top Entry: 0 = With Pegs(Standard)
1 = Without Peg
Side Entry: 0 = Standard

⑧ Packing Options:
R0 = Tape & Reel
T0 = Tube
⑨ Process: -NH = For Lead Free IR process and Halogen-Free

CI16 Series 1.00mm(.039") Wire to Board Connectors Housing & Terminal

◎ Mate with CI16 header
◎ Can be used with CI16 crimp clip terminal
◎ Insulator: Nylon 66 UL 94V-0, Color Nature

RoHS Compliant HF

P/N	CI16**SL00A-NH

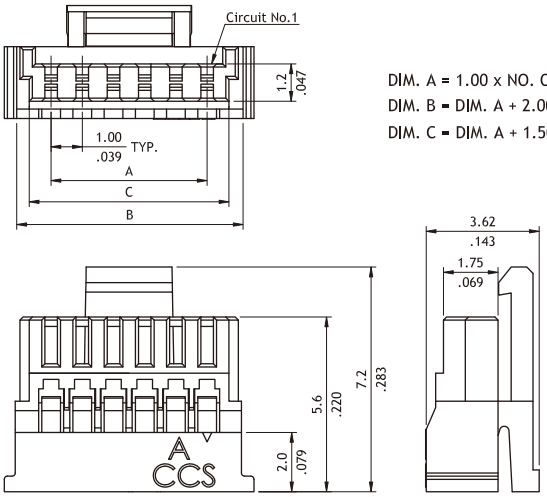

DIM. A = 1.00 x NO. OF SPACES
DIM. B = DIM. A + 2.00
DIM. C = DIM. A + 1.50

P/N	CI16**SL000-NH

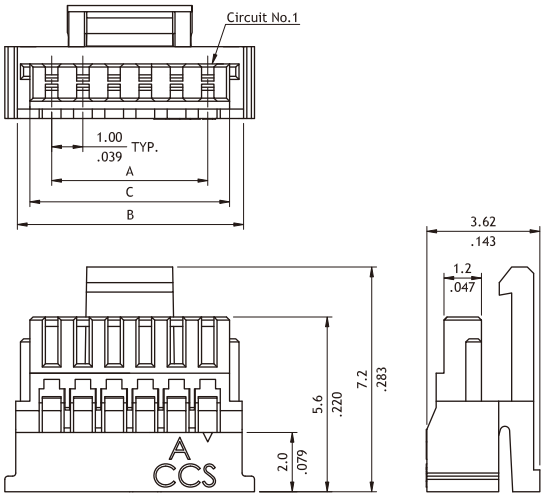

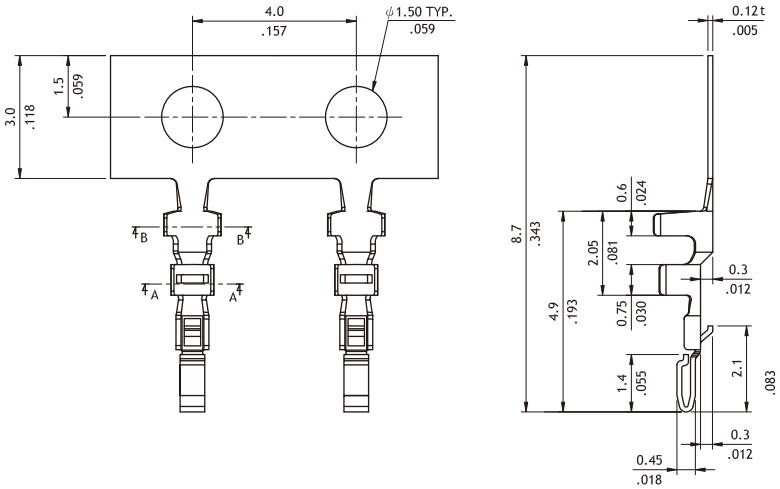

Wire Range	Insulation Diameter	Reel Q'ty
AWG #28~#32	0.78~0.92(mm) (.031~.036)	16,000 PCS.

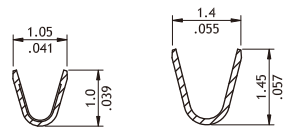

SEC.: A-A SEC.: B-B

Ordering Code

①	②	③	④	⑤		⑥
CI16	20	S	L	000	-	NH

① Series No.
② No. of Circuits: 02 to 20
③ S = Connector housing
④ L=With Locking Latch
⑤ Other Options: 000 = Standard
00A=Type 1
⑥ Process: -NH = For Halogen-Free

①	②	③	④	⑤
CI16	T01	1	P	E0

① Series No.
② Type:T01= AWG #28~#32
③ Plating Code: 1= Tin over Nickel
④ Material: P=Phosphor Bronze
⑤ Other Option: E0=Standard

CI16 Series 1.00mm(.039") Wire to Board Connectors SMT Headers

◎ Fixed tabs provide PCB hold-down
◎ Mate with CI16 housing
◎ Insulator: High temperature plastic UL 94V-0, Color Nature
◎ Terminal: Tin plated Phosphor Bronze

RoHS Compliant

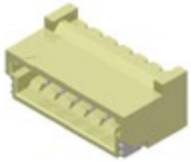

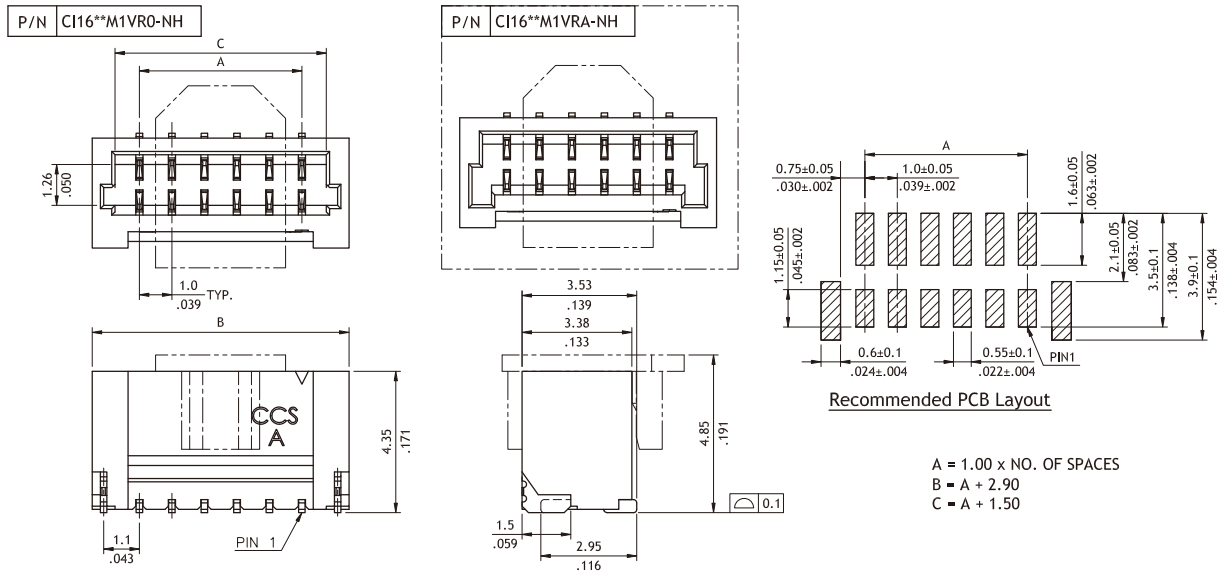

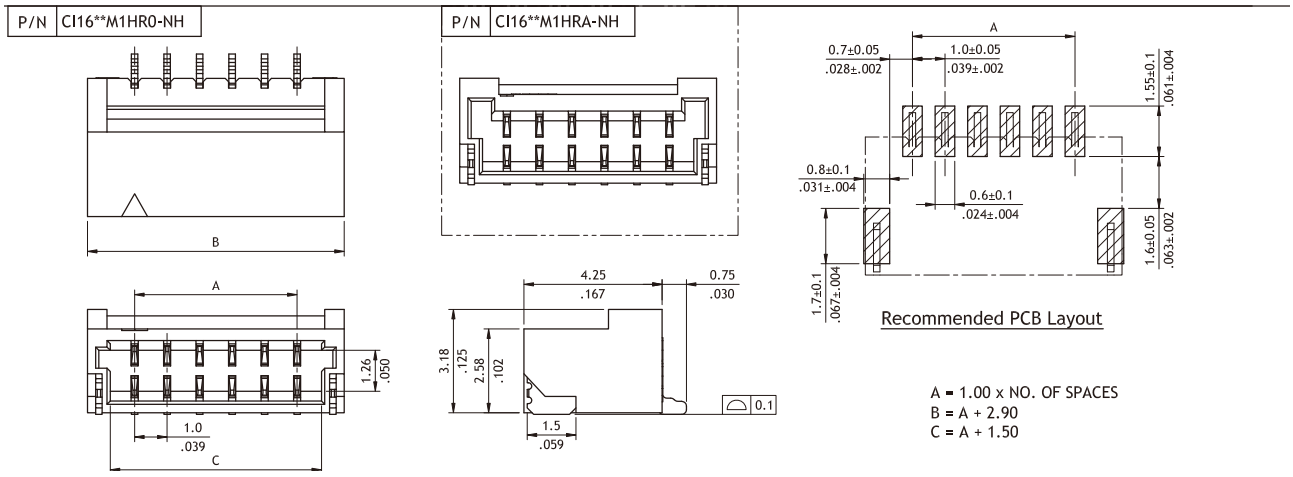

Ordering Code

①	②	③	④	⑤	⑥	⑦		⑧
C I 1 6	2 0	M	1	V	R	0	-	NH

① Series No.
② No. of Circuits: 02 to 20
③ M = SMT Type
④ Plating Code: 1 = Matte Tin over Nickel
⑤ Type: V = Top Entry
H = Side Entry
⑥ Packing Options: R = Tape & Reel
⑦ Other Option: 0 = Standard
A = Type 1
⑧ Process: -NH = For Lead Free IR Process and Halogen-Free

CI14 Series 1.00mm(.039") Wire to Board Connectors Housing & Terminal

◎ Mate with CI14 Header
◎ Can be used with CI14 crimp clip terminal
◎ Insulator: Glass filled polyester UL 94V-0, Color Nature
◎ Terminal: Tin plated Phosphor Bronze

RoHS Compliant HF

Without Latch Type

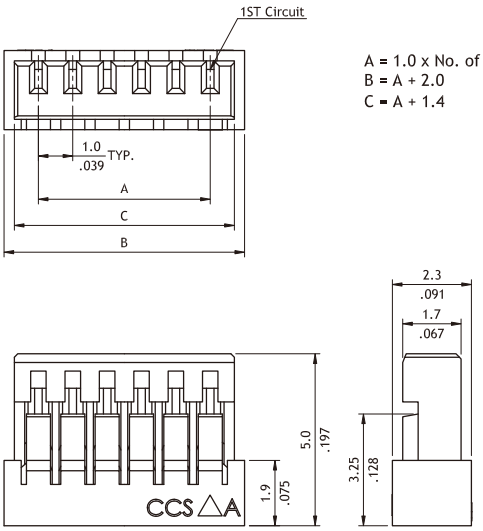

A = 1.0 x No. of Spaces
B = A + 2.0
C = A + 1.4

With Latch Type

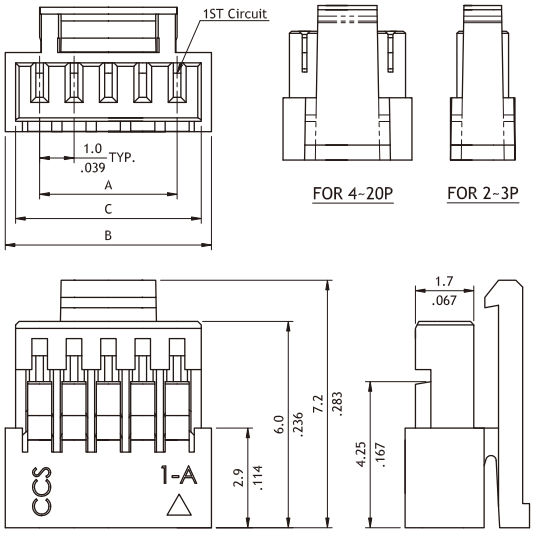

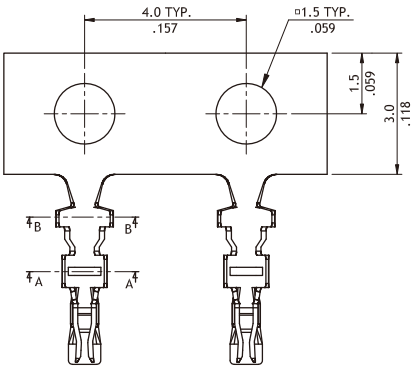

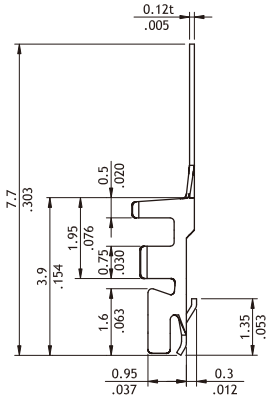

Wire Range	Insulation Diameter	Reel Q'ty
AWG #28~#32	0.65~0.92(mm) (.026~.036)	16,000 PCS.

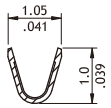

SEC.: A-A

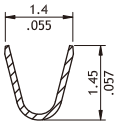

SEC.: B-B

Ordering Code

① ② ③ ④ ⑤

C I 1 4 | 2 0 | S | 0 0 0 A | - | NH

① Series No.
② No. of Circuits: 02 to 20
③ S = Housing
④ 000A = Without Locking Latch
L000 = With Locking Latch
⑤ Process: -NH = Halogen-Free

① ② ③ ④ ⑤

C I 1 4 | T01 | 1 | P | E 0

① Series No.
② Type:T01= AWG #28~#32
③ Plating Code: 1= Tin plated
④ Material: P=Phosphor Bronze
⑤ Other Option: E0=Standard

CI14 Series 1.00mm(.039") Wire to Board SMT Side Entry Headers

◎ Fixed tabs provide PCB hold-down
◎ Mate with CI14 Housing
◎ Insulator : High temperature plastic UL 94V-0, Color Nature

RoHS Compliant

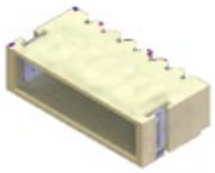

P/N	CI14**M1HR0-NH

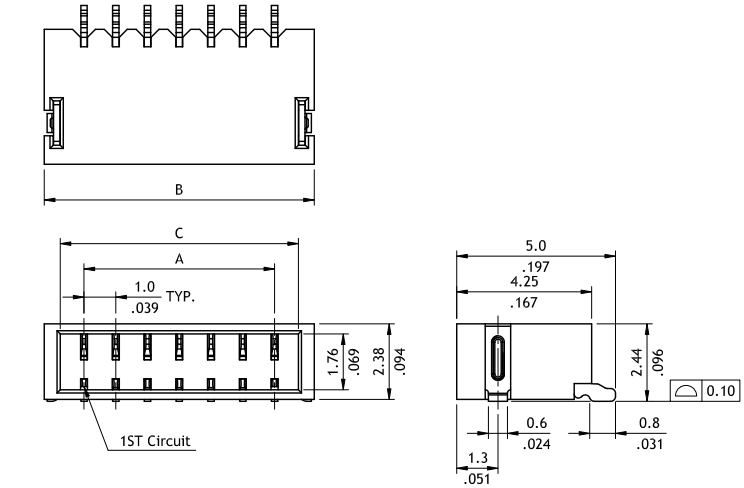

Circuits	Dimension		
	A	B	C
2	1.0(.039)	3.5(.138)	2.5(.098)
3	2.0(.079)	4.5(.177)	3.5(.138)
4	3.0(.118)	5.5(.216)	4.5(.177)
5	4.0(.157)	6.5(.256)	5.5(.216)
6	5.0(.197)	7.5(.295)	6.5(.256)
7	6.0(.236)	8.5(.335)	7.5(.295)
8	7.0(.276)	9.5(.374)	8.5(.335)
9	8.0(.315)	10.5(.413)	9.5(.374)
10	9.0(.354)	11.5(.453)	10.5(.413)
11	10.0(.394)	12.5(.492)	11.5(.453)
12	11.0(.433)	13.5(.531)	12.5(.492)
13	12.0(.472)	14.5(.571)	13.5(.531)
14	13.0(.512)	15.5(.610)	14.5(.571)
15	14.0(.551)	16.5(.650)	15.5(.610)
16	15.0(.590)	17.5(.689)	16.5(.650)
17	16.0(.630)	18.5(.728)	17.5(.689)
18	17.0(.669)	19.5(.768)	18.5(.728)
19	18.0(.709)	20.5(.807)	19.5(.768)
20	19.0(.748)	21.5(.846)	20.5(.807)

P/N	CI14**M1HRL-NH

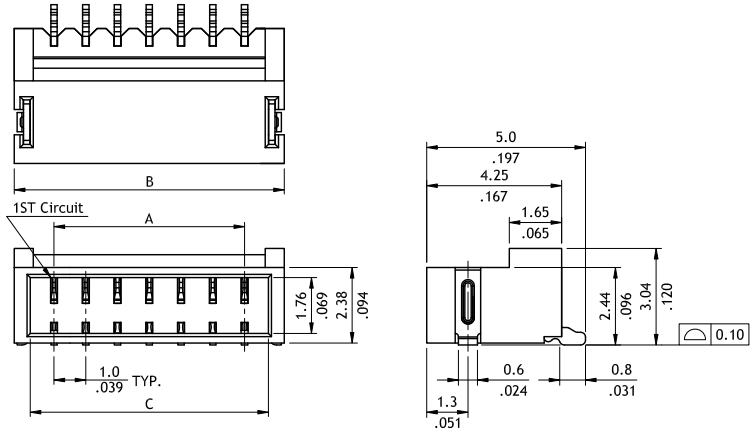

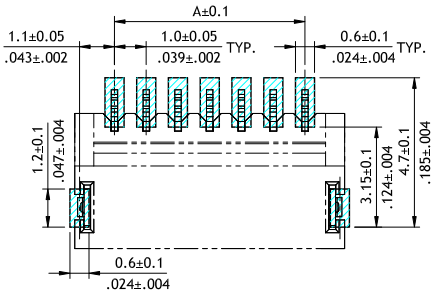

Recommended PCB Layout

P/N	CI14**M1HRC-NH

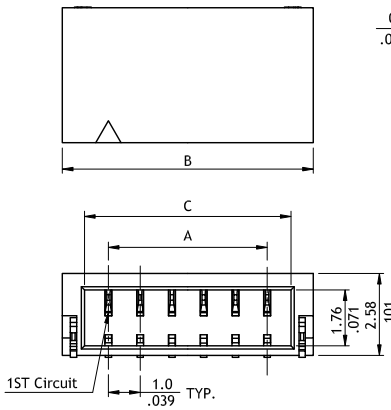

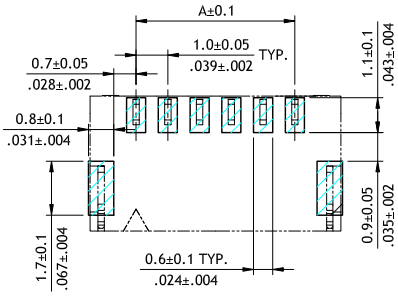

Recommended PCB Layout

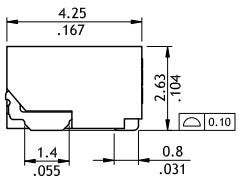

Circuits	Dimension		
	A	B	C
2	1.0(.039)	3.9(.154)	2.5(.098)
3	2.0(.079)	4.9(.193)	3.5(.138)
4	3.0(.118)	5.9(.232)	4.5(.177)
5	4.0(.157)	6.9(.272)	5.5(.216)
6	5.0(.197)	7.9(.311)	6.5(.256)
7	6.0(.236)	8.9(.350)	7.5(.295)
8	7.0(.276)	9.9(.390)	8.5(.335)
9	8.0(.315)	10.9(.429)	9.5(.374)
10	9.0(.354)	11.9(.469)	10.5(.413)
11	10.0(.394)	12.9(.508)	11.5(.453)
12	11.0(.433)	13.9(.547)	12.5(.492)
13	12.0(.472)	14.9(.587)	13.5(.531)
14	13.0(.512)	15.9(.626)	14.5(.571)
15	14.0(.551)	16.9(.665)	15.5(.610)
16	15.0(.590)	17.9(.705)	16.5(.650)
17	16.0(.630)	18.9(.744)	17.5(.689)
18	17.0(.669)	19.9(.783)	18.5(.728)
19	18.0(.709)	20.9(.823)	19.5(.768)
20	19.0(.748)	21.9(.862)	20.5(.807)

CI14 Series 1.00mm(.039") Wire to Board SMT Side / Top Entry Headers

◎ Fixed tabs provide PCB hold-down
◎ Mating with CI14 Housing
◎ Insulator: High temperature plastic UL 94V-0, color Nature

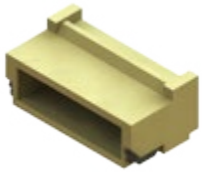

RoHS Compliant

P/N	CI14**M1HR0-NH

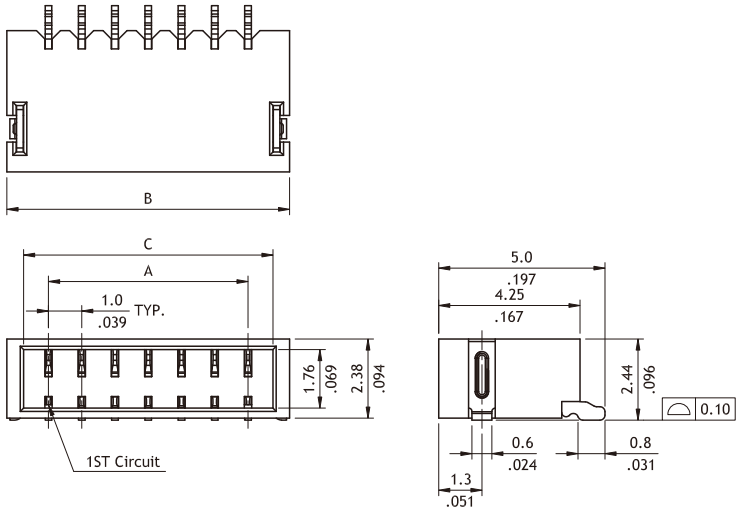

Circuits	Dimension		
	A	B	C
2	1.0(.039)	3.5(.138)	2.5(.098)
3	2.0(.079)	4.5(.177)	3.5(.138)
4	3.0(.118)	5.5(.216)	4.5(.177)
5	4.0(.157)	6.5(.256)	5.5(.216)
6	5.0(.197)	7.5(.295)	6.5(.256)
7	6.0(.236)	8.5(.335)	7.5(.295)
8	7.0(.276)	9.5(.374)	8.5(.335)
9	8.0(.315)	10.5(.413)	9.5(.374)
10	9.0(.354)	11.5(.453)	10.5(.413)
11	10.0(.394)	12.5(.492)	11.5(.453)
12	11.0(.433)	13.5(.531)	12.5(.492)
13	12.0(.472)	14.5(.571)	13.5(.531)
14	13.0(.512)	15.5(.610)	14.5(.571)
15	14.0(.551)	16.5(.650)	15.5(.610)
16	15.0(.590)	17.5(.689)	16.5(.650)
17	16.0(.630)	18.5(.728)	17.5(.689)
18	17.0(.669)	19.5(.768)	18.5(.728)
19	18.0(.709)	20.5(.807)	19.5(.768)
20	19.0(.748)	21.5(.846)	20.5(.807)

P/N	CI14**M1HRL-NH

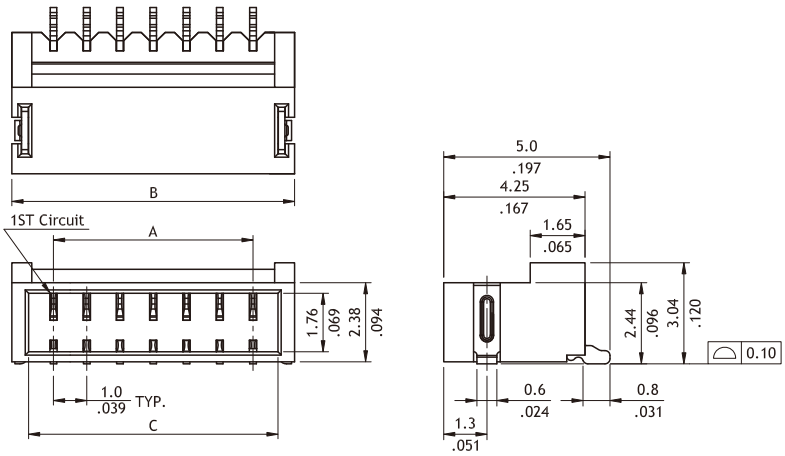

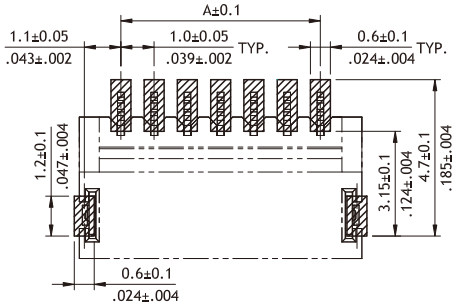

Recommended PCB Layout

Ordering Code

①	②	③	④	⑤	⑥		⑦
CI14	20	M	1	H	RC	-	NH

① Series No.
② No. of Circuits:
(Available: R0: 2~20
RC: 2~12
RL: 2~20
RE: 2~12)
③ M = SMT Type
④ Plating Code: 1 = Matte Tin over Nickel
⑤ Type: H = Side Entry
⑥ Other Options:
R0 = Normal Type with Reel Packing (H Type, 02 to 20)
RL = Normal Lock Type with Reel Packing (H Type, 02 to 20)
RC = Short Type with Reel Packing (H Type, 02 to 12)
RE = Short Lock Type with Reel Packing (H Type, 02 to 12)
⑦ Process: -NH = For Lead Free IR process and Halogen-Free

CI14 Series 1.00mm(.039") Wire to Board SMT Side / Top Entry Headers

◎ Fixed tabs provide PCB hold-down
◎ Mating with CI14 Housing
◎ Insulator: High temperature plastic UL 94V-0, color Nature

RoHS Compliant

P/N	CI14**M1VL0-NH

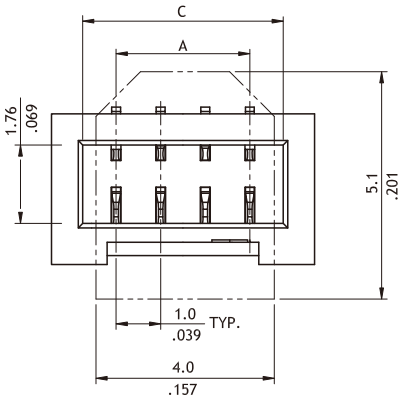

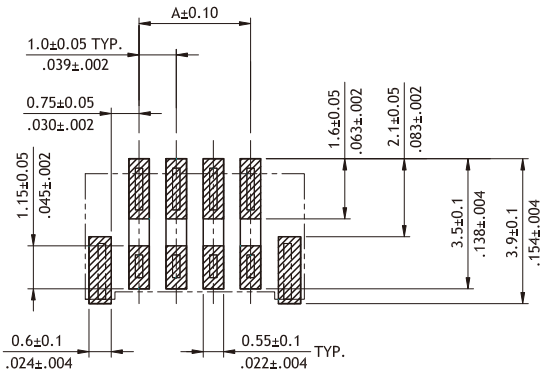

Recommended PCB Layout

A = 1.0 x No. of Spaces
B = A + 2.9(2~3P)
B = A + 2.7(4~12P)
C = A + 1.5
D = A + 2.0

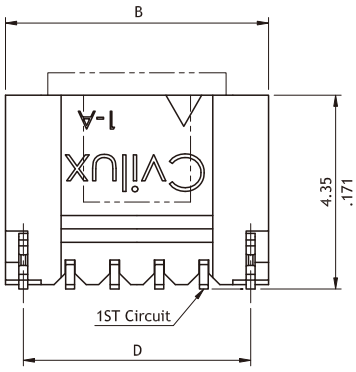

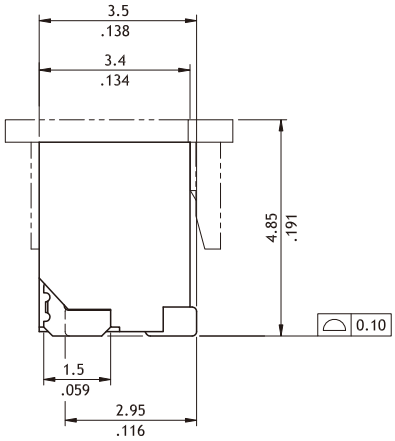

Ordering Code

①	②	③	④	⑤	⑥		⑦
CI14	12	M	1	V	L0	-	NH

① Series No.
② No. of Circuits: 2~12
③ M = SMT Type
④ Plating Code: 1 = Matte Tin over Nickel
⑤ Type: V = Top Entry
⑥ Other Options:
L0 = Locking Type with Reel Packing
⑦ Process: -NH = For Lead Free IR process and Halogen-Free

CI14 Series 1.00mm(.039") Wire to Board Housing & SMT Side Entry Header

- ◎ Can be used CI14 crimp clip terminal
- ◎ Insulator: High temperature plastic UL 94V-0, Color Nature
- ◎ Inuslator: Nylon 66 UL 94V-0, Color Nature
- ◎ With locking latch provide secure mating

RoHS Compliant Pb HF

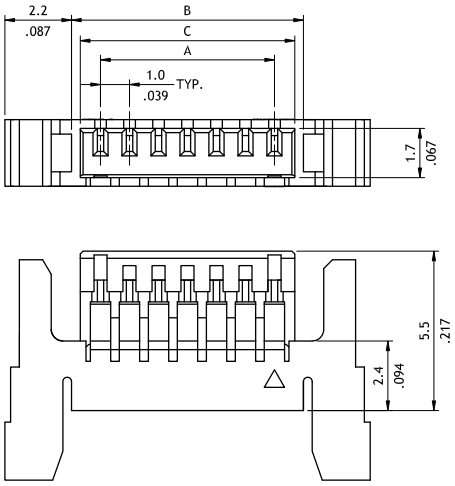

A = 1.0 x NO. OF SPACES
B = A + 2.0
C = A + 1.4

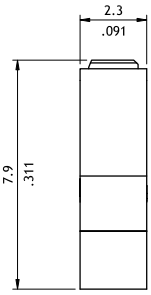

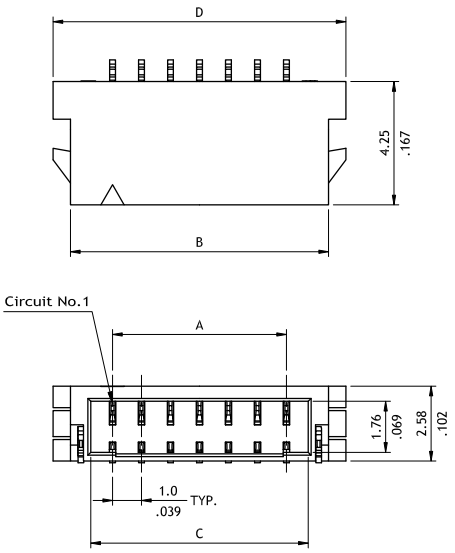

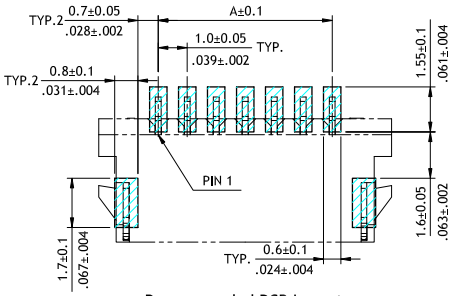

Recommended PCB Layout

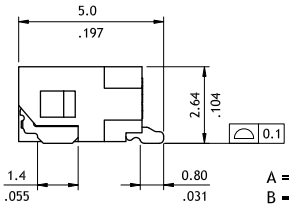

A = 1.00 x NO. OF SPACES
B = A + 2.90
C = A + 1.50
D = A + 4.10

Ordering Code

①	②	③	④	⑤		⑥
CI14	03	S	L	00C	-	NH

① Series No.
② No. of Circuits: 03 to 20
③ S= Housing
④ L=With Locking Latch
⑤ Other Option: 00C = Latch Type 2
⑥ Process: -NH = Halogen-Free

①	②	③	④	⑤	⑥	⑦		⑧
CI14	03	M	1	H	R	I	-	NH

① Series No.
② No. of Circuits: 03 to 20
③ M = SMT Type
④ Plating Code: 1 = Matte Tin over Nickel
⑤ Type: H = Side Entry
⑥ Packing Options: R = Tape & Reel
⑦ Other Options: I = Dual Latch Type
⑧ Process: -NH = For Lead Free IR process and Halogen-Free

CI63 Series 1.20mm(.048") Wire to Board Housing / Terminal

◎ Mate with CI63 Header
◎ Can be used with CI63 crimp clip terminal
◎ Insulation: High temperature plastic UL 94V-0, Color Black

RoHS Compliant Pb HF

P/N	CI63**S0000

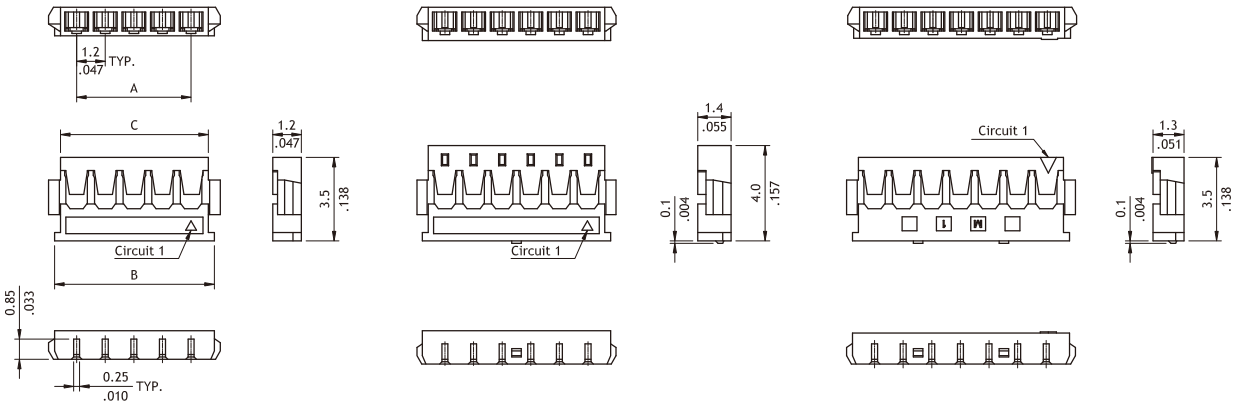

2-5PIN 6PIN 7PIN

A = 1.20 x No. of Circuits
B = A + 1.9
C = A + 1.4

P/N	CI63T012PP0

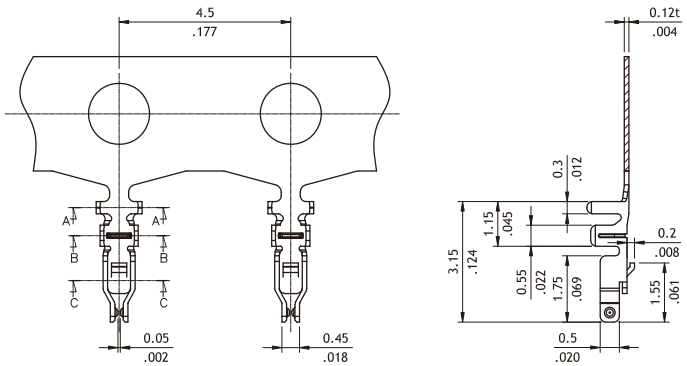

Wire Range	Insulation Diameter	Reel Q'ty
AWG #28~#30	0.70 (.028) MAX.	15,000 PCS.

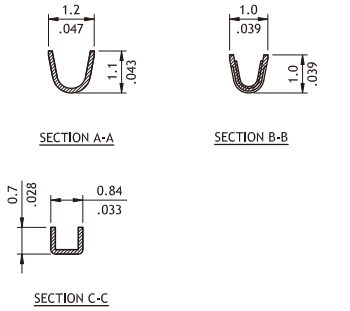

SECTION A-A SECTION B-B SECTION C-C

Ordering Code

① ② ③ ④

C I 6 3 | 0 7 | S | 0 0 0 0

① Series No.
② No. of Circuits: 02 to 07
③ S = Housing
④ Other Options: 0000 = Standard

① ② ③ ④ ⑤

C I 6 3 | T 0 1 | 2 | P | P 0

① Series No.
② Type: T01=AWG #28~ #30
③ Plating :
2 = Gold Flash plated over Nickel
④ Material : P=Phosphor Bronze
⑤ Option : P0 =Standard

CI63 Series 1.20mm(.048") Wire to Board SMT Headers

◎ Mate with CI63 Housing
◎ Insulation: High temperature plastic UL 94V-0,
◎ Color Black

RoHS Compliant Pb HF

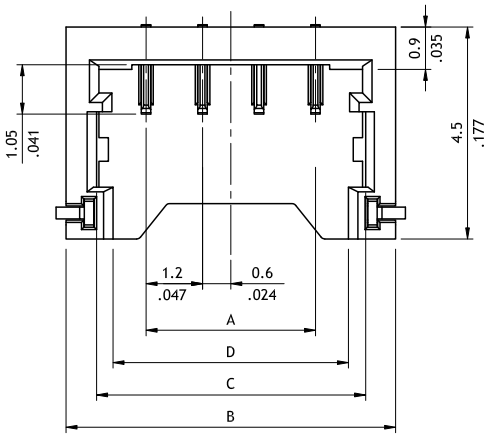

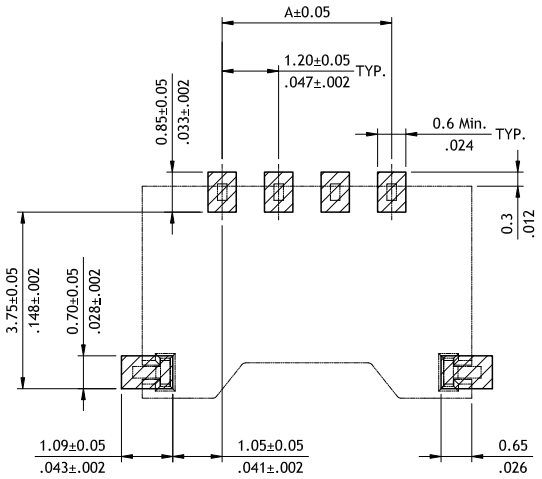

Recommended PCB Layout

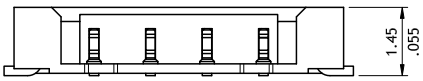

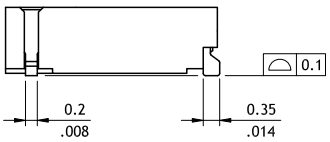

A = 1.20 x No. of Circuits
B = A + 3.4
C = A + 2.1
D = A + 1.4

Ordering Code

①	②	③	④	⑤	⑥	⑦		⑧
CI63	10	M	2	V	R	0	-	NH

① Series No.
② No. of Circuits: 2 to 8,10
③ Solder Type: M = SMT
④ Plating Code: 2 = Gold plated over Nickel
⑤ Type: V = Vertical Type
⑥ Packing Options: R = Tape & Reel Packing
⑦ Other Option: 0 = Standard
⑧ Process: -NH = For Lead Free IR process and Halogen-Free

CI40 Series 1.25mm(.049") Wire to Board Housing & Terminal & SMT Header

◎ Locking slots provide secure mating
◎ Fixed tab PCB hold-down and strain-relief for SMT tail
◎ Insulator: High temperture plastic UL 94V-0, Color Nature

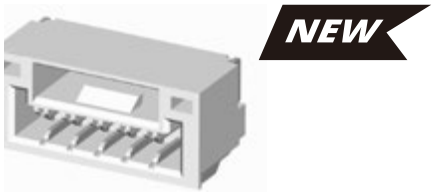

P/N	CI40**M1HR0-NH

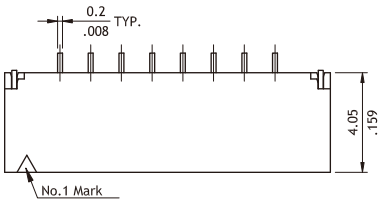

A = 1.25 x NO. OF SPACES
B = A + 4.50
C = A + 2.60

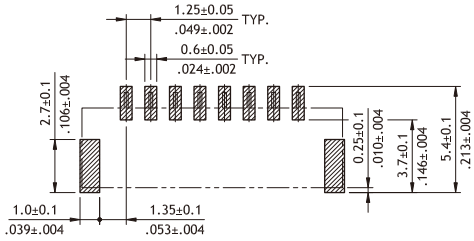

Recommended PCB Layout

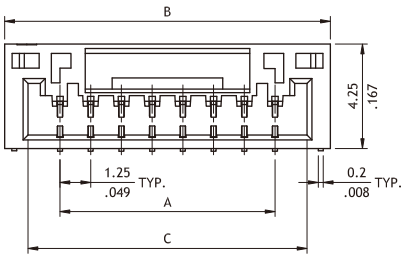

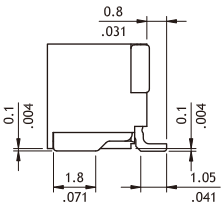

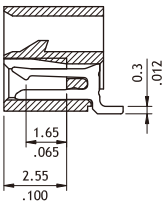

P/N	CI40**M1VR0-NH

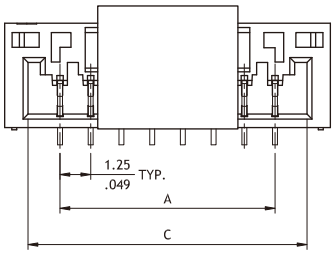

A = 1.25 x NO. OF SPACES
B = A + 4.50
C = A + 2.60

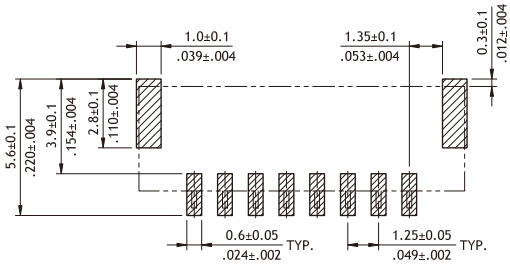

Recommended PCB Layout

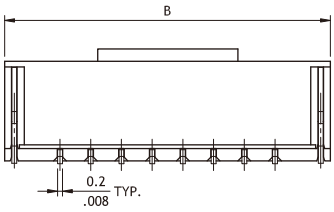

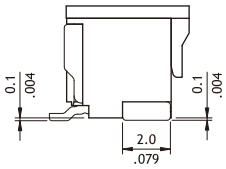

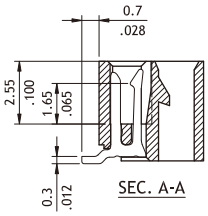

SEC. A-A

Ordering Code

①	②	③	④	⑤	⑥		⑦
CI40	15	M	1	V	R0	-	NH

① Series No.
② No. of Circuits: 02 to 15
③ Contact Type : M = SMT
④ Plating Code:
1 = Matte Tin plated over Nickel

⑤ Tail Style: H=Side entry
V=Vertical
⑥ Option : R0=Tape & Reel Packing
⑦ Process: -NH = For Lead Free IR Process and Halogen-Free

CI40 Series 1.25mm(.049") Wire to Board Housing & Terminal & SMT Header

◎ Locking latch provide secure mating
◎ Insulation: Nylon66 UL 94V-0,Color Nature
◎ With Gold flash SMT type contact

NEW

RoHS Compliant Pb HF

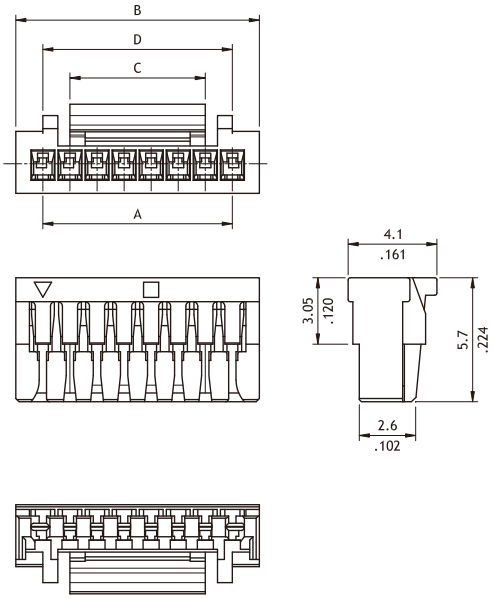

Circuits	Dimension			
	A	B	C	D
2	1.25(.049)	3.75(.148)	2.20(.087)	-
3	2.50(.098)	5.00(.197)	3.20(.126)	-
4	3.75(.148)	6.25(.246)	4.25(.167)	-
5	5.00(.197)	7.50(.295)	4.25(.167)	-
6	6.25(.246)	8.75(.344)	6.25(.246)	-
7	7.50(.295)	10.00(.394)	6.25(.246)	-
8	8.75(.344)	11.25(.443)	6.25(.246)	8.75(.344)
9	10.00(.394)	12.50(.492)	6.25(.246)	10.00(.394)
10	11.25(.443)	13.75(.541)	8.20(.323)	11.25(.443)
11	12.50(.492)	15.00(.591)	8.20(.323)	12.50(.492)
12	13.75(.541)	16.25(.640)	8.20(.323)	13.75(.541)
13	15.00(.591)	17.50(.689)	8.20(.323)	15.00(.591)
14	16.25(.640)	18.75(.738)	8.20(.323)	13.75(.541)
15	17.50(.689)	20.00(.787)	8.20(.323)	15.00(.591)
18	21.25(.837)	23.75(.935)	8.20(.323)	10.70(.421)
20	23.75(.935)	26.25(1.033)	8.20(.323)	10.70(.421)

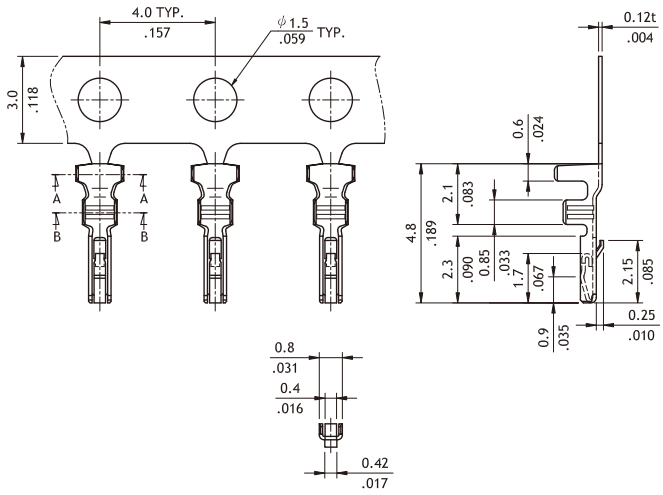

Wire Range	Insulation	Reel Q'ty
AWG #26-#30	1.00 (.039) MAX.	15,000 PCS

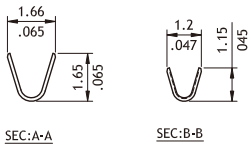

Ordering Code

① ② ③ ④ ⑤
CI40 02 S L000 - NH

① Series No.
② No. of Circuits:
③ S =Connector Housing
④ Other Options: L000 = Nature (Standard)
⑤ Process: -NH = Halogen-Free

① ② ③ ④ ⑤
CI40 T01 1 P P0

① Series No.
② Type: T01=AWG #26~ #30
③ Plating Code:
1=Tin over Nickel
④ Material : P=Phosphor Bronze
⑤ Other Options : P0 =Standard

CI42 Series 1.25mm(.049") Wire to Board Housing & Terminal

◎ Mate with CI42 Header
◎ Can be used with CI42 Crimp clip terminal
◎ Insulation: Glass filled polyester UL 94V-0,Color Nature

RoHS Compliant

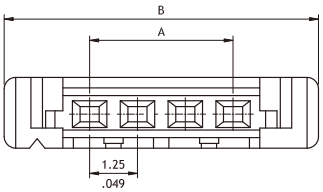

A = 1.25 * No. of Spaces
B = A + 4.47
C = A + 1.4

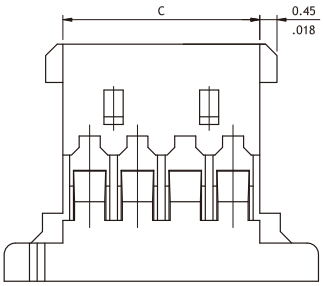

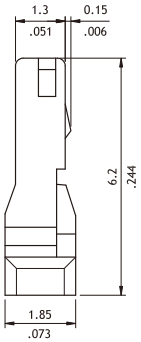

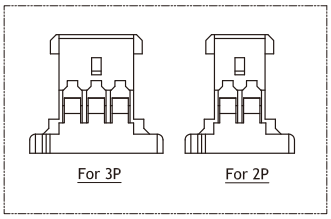

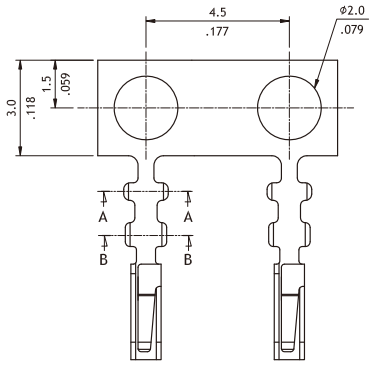

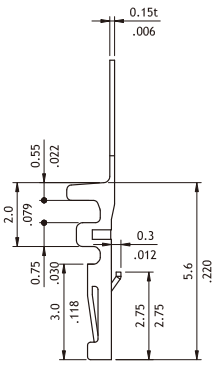

Wire Range	Insulation Diameter	Reel Q'ty
AWG #28~#32	1.0 (.039) MAX.	20,000 PCS.

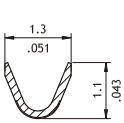

SEC.: B-B

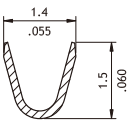

SEC.: A-A

Ordering Code

① ② ③ ④ ⑤
C I 4 2 | 1 0 | S | L | 0 0 0

① Series No.
② No. of Circuits: 02 to 20
③ S= Housing
④ L=With Latch
⑤ Other Options: 000=Standard

① ② ③ ④ ⑤
C I 4 2 | T 0 1 | 1 | P | P 0

① Series No.
② Type: T01=AWG #28~ #32
③ Plating Code:
1 = Tin over Nickel
④ Material : P=Phosphor Bronze
⑤ Other Options : P0 =Standard

CI42 Series 1.25mm(.049") Wire to Board SMT Header

◎ Locking ramps provide secure mating
◎ Fixed tab PCB hold-down and strain-relief for SMT tail
◎ Insulator: High temperature plastic UL 94V-0, Color Nature
◎ With Gold flash SMT type contact

RoHS Compliant Pb HF

P/N CI42**M*H*0/P-NH

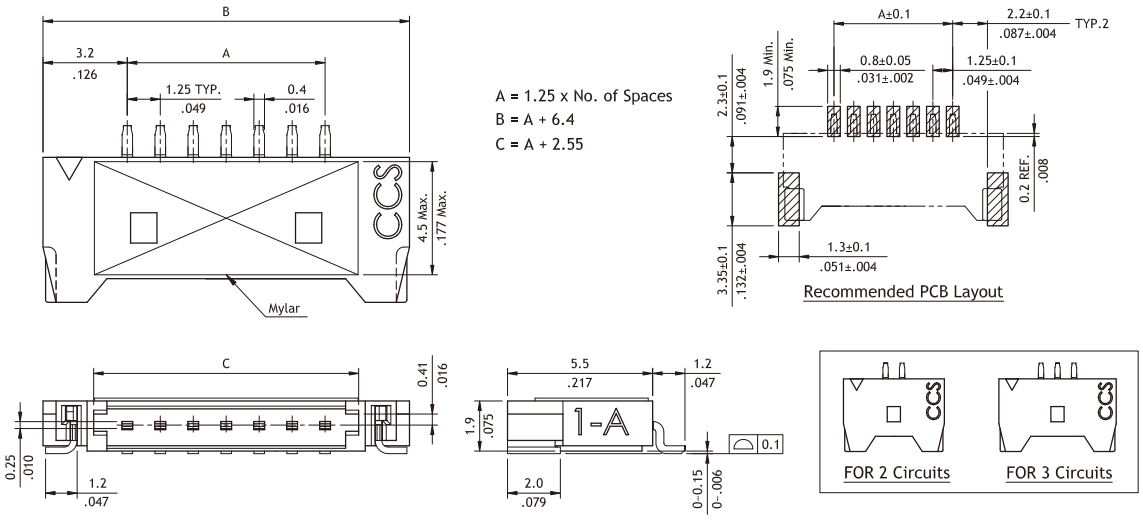

P/N CI42**M*H*A/D-NH

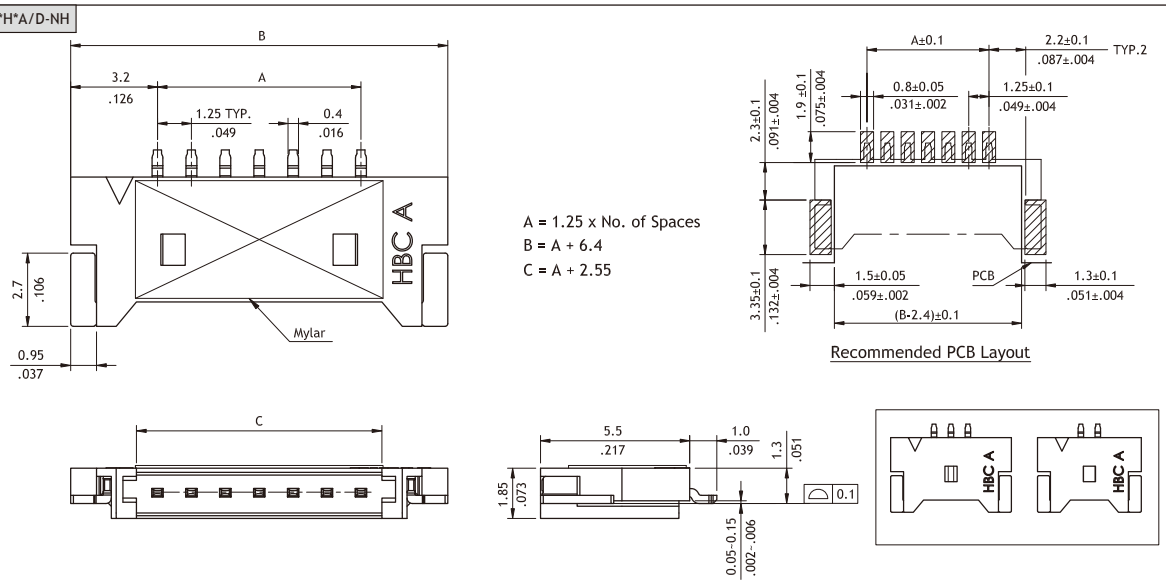

Ordering Code

①	②	③	④	⑤	⑥	⑦		⑧
C I 4 2	1 2	M	2	H	R	P	-	NH

① Series No.
② No. of Circuits: 02 to 12
③ M = SMT Type
④ Plating Code:
2 = Gold flash over Nickel
⑤ Type: H = Side Entry
⑥ Packing Options:
R = Tape & Reel
⑦ Other Options:
0 = Without Mylar
P = With Mylar
D = Middle mount type, Without Mylar
A = Middle mount type, With Mylar
⑧ Process: -NH = For Lead Free IR process and Halogen-Free

CI43 Series 1.25mm(.049") Wire to Board Housing & Terminal & SMT Header

◎ 2.03mm above the board
◎ Copper alloy dual contacts
◎ Insulation: High temperature plastic UL 94V-0, Color Black
◎ With metal fixed tabs to secure connector in place

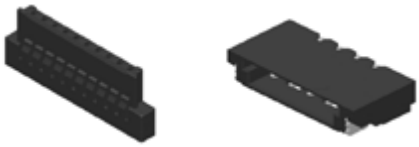

RoHS Compliant

P/N CI43**S0000

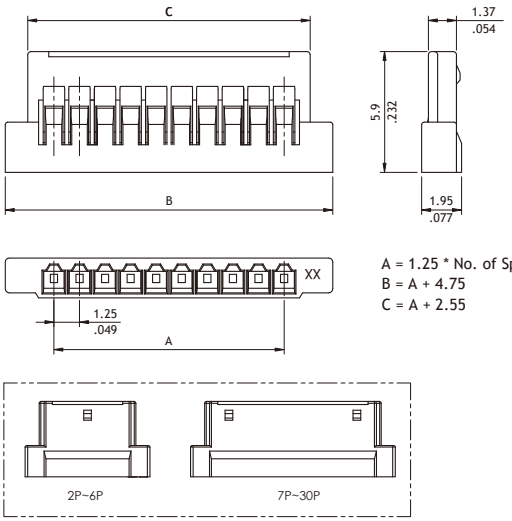

A = 1.25 * No. of Spaces
B = A + 4.75
C = A + 2.55

P/N CI43T011PE0

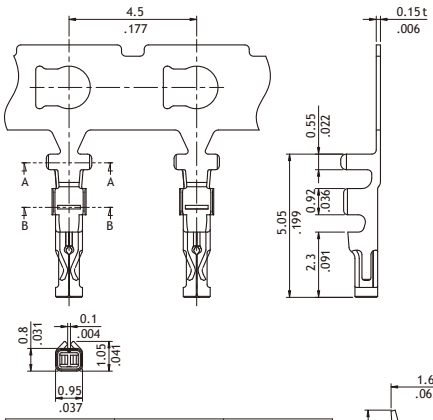

Wire Range	Insulation Diameter	Reel Q'ty
AWG #28~#32	1.0 (.039) MAX.	20,000 PCS.

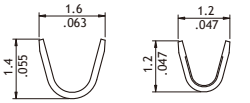

SEC.: A-A SEC.: B-B

P/N CI43**M1HR0-NH

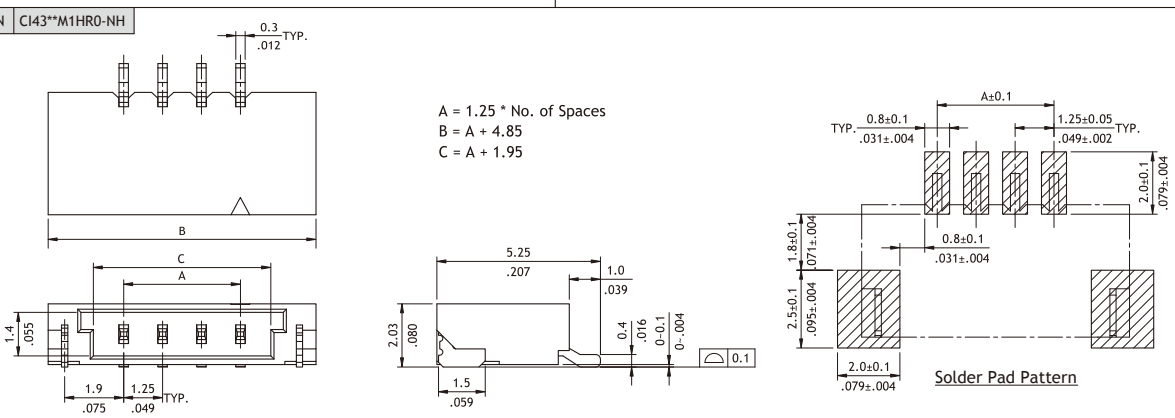

A = 1.25 * No. of Spaces
B = A + 4.85
C = A + 1.95

Solder Pad Pattern

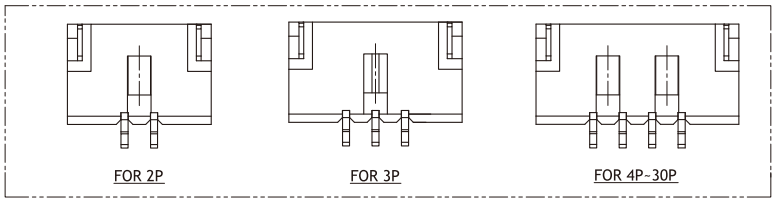

Ordering Code

① ② ③ ④
C I 4 3 | 3 0 | S | 0 0 0 0

① Series No.
② No. of Circuits: 02 to 15,20,25,30
③ S = Housing
④ Other Options:
0000 = Standard

① ② ③ ④ ⑤ ⑥ ⑦ ⑧
C I 4 3 | 1 2 | M | 1 | H | R | 0 | - NH

① Series No.
② No. of Circuits: 02 to 12
③ M = SMT Type
④ 1 = Matte Tin plated over Nickel
2 = Gold flash over Nickel
⑤ Type: H=Side Entry
⑥ Packing Options:
R = Tape & Reel
⑦ Other Options:
0 = Standard
⑧ Process: -NH = For Lead Free soldering process and Halogen-Free

CI44 Series 1.25mm(.049") Wire to Board Connectors Housing & Terminal

- ◎ Latch housing secure terminal in housing and provides extra terminal retention
- ◎ Terminal accommodated AWG #28 ~ #32
- ◎ Insulator: Polyester UL 94V-0, Color Nature
- ◎ Terminal: Tin plated, Phosphor Bronze
- ◎ Mate with CI44 header

RoHS Compliant HF

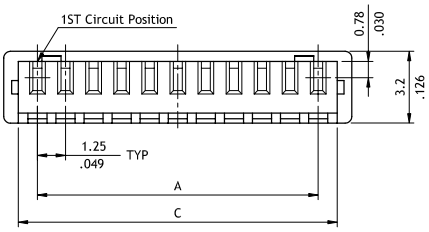

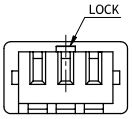

FOR 2 & 3 PIN Circuits

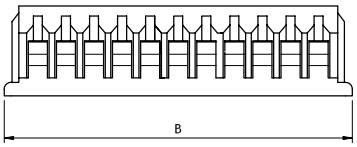

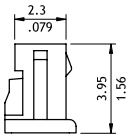

Circuits	Dimension		
	A	B	C
2	1.25(.049)	4.25(.167)	2.95(.116)
3	2.50(.098)	5.5(.217)	4.20(.165)
4	3.75(.148)	6.75(.266)	5.45(.215)
5	5.00(.197)	8.0(.315)	6.70(.264)
6	6.25(.246)	9.25(.364)	7.95(.313)
7	7.50(.295)	10.5(.413)	9.20(.362)
8	8.75(.344)	11.75(.463)	10.45(.411)
9	10.00(.394)	13.0(.512)	11.70(.461)
10	11.25(.443)	14.25(.561)	12.95(.510)
11	12.50(.492)	15.5(.610)	14.20(.559)
12	13.75(.541)	16.75(.659)	15.45(.608)
13	15.00(.591)	18.0(.709)	16.70(.657)
14	16.25(.640)	19.25(.758)	17.95(.707)
15	17.50(.689)	20.5(.807)	19.20(.7560

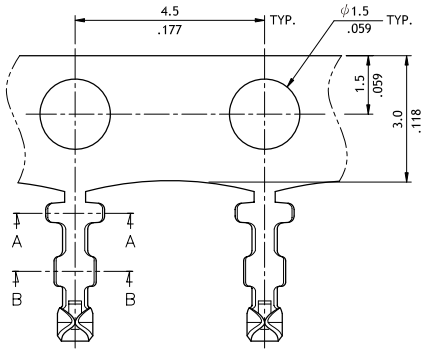

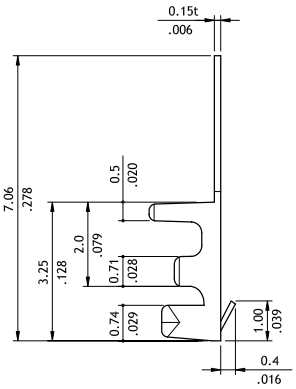

Wire Range	Insulation Diameter	Reel Q'ty
AWG #28-#32	1.0 (.039) MAX.	15,000 PCS.

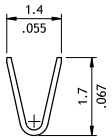

SEC.:A-A

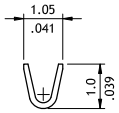

SEC.:B-B

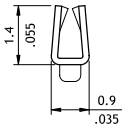

Ordering Code

① ② ③ ④ ⑤ ⑥

C I 4 4 | 1 5 | S 0 0 | 0 | 0 | - NH

① Series No.
② No. of Circuits: 02 to 15
③ S00= Housing
④ Color: 0 = Color Nature
⑤ Other Options: 0 = Standard
⑥ Process: -NH = Halogen-Free

① ② ③ ④ ⑤

C I 4 4 | T01 | 1 | P | P 0

① Series No.
② Type: T01 = AWG #28 ~ #32
③ Plating Code: 1 = Tin over Nickel
④ Material: P = Phosphor Bronze
⑤ Other Options: P0 = Standard

CI44 Series 1.25mm(.049") Wire to Board Connectors DIP Headers

- ◎ Polarization and Low-profile
- ◎ Locking slots provide secure mating
- ◎ Mate with CI44 housing
- ◎ Insulator: High temperature plastic UL 94V-0, Color Nature
- ◎ With Tin plated DIP type contact

RoHS Compliant

Straight

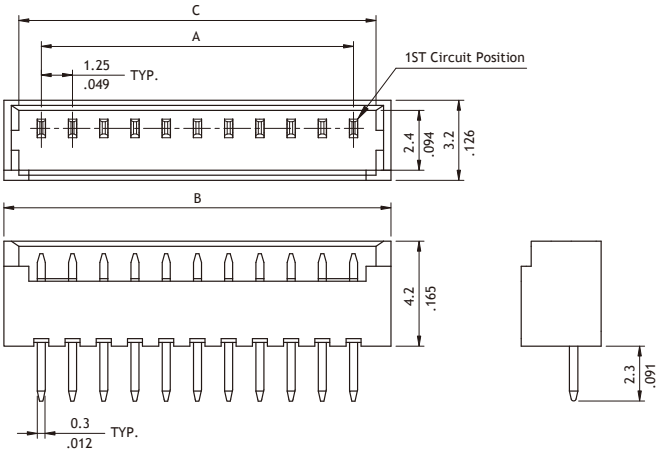

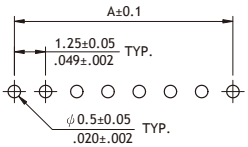

Recommended PCB Layout

Circuits	Dimension		
	A	B	C
2	1.25(.049)	4.35(.171)	3.15(.124)
3	2.50(.098)	5.6(.220)	4.40(.173)
4	3.75(.148)	6.85(.270)	5.65(.222)
5	5.00(.197)	8.1(.319)	6.90(.272)
6	6.25(.246)	9.35(.368)	8.15(.321)
7	7.50(.295)	10.6(.417)	9.40(.370)
8	8.75(.344)	11.85(.467)	10.65(.419)
9	10.00(.394)	13.1(.516)	11.90(.469)
10	11.25(.443)	14.35(.565)	13.15(.518)
11	12.50(.492)	15.6(.614)	14.40(.567)
12	13.75(.541)	16.85(.663)	15.65(.616)
13	15.00(.591)	18.1(.713)	16.90(.665)
14	16.25(.640)	19.35(.762)	18.15(.715)
15	17.50(.689)	20.6(.811)	19.40(.764)

Right Angle

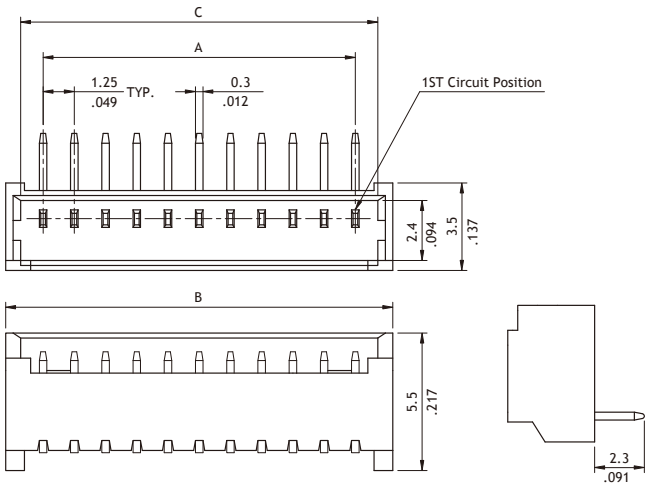

Ordering Code

①	②	③	④	⑤	⑥		⑦
CI44	15	P	1	V	00	-	NH

① Series No.
② No. of Circuits: 02 to 15
③ P = DIP Type
④ Plating Code:
1 = Matte Tin over Nickel plated
⑤ Type: V = Top Entry
H = Side Entry

⑥ Other Options:
00 = Standard (Tube packing)
R0 = Tape & Reel (Without Pick & Place Pad)
RP = Tape & Reel (With Pick & Place Pad)
⑦ Process: -NH = For Lead Free soldering process and Halogen-Free
*Special options consult manufacturer

CI44 Series 1.25mm(.049") Wire to Board Connectors SMT Headers

- ◎ Polarization and Low-profile
- ◎ Locking slots provide secure mating
- ◎ Fixed tabs provide PCB hold-down and strain-relief for SMT
- ◎ Insulator: High temperature plastic UL 94V-0 , Color Nature
- ◎ With Tin plated SMT type contact
- ◎ Mate with CI44 housing

RoHS Compliant

Top Entry

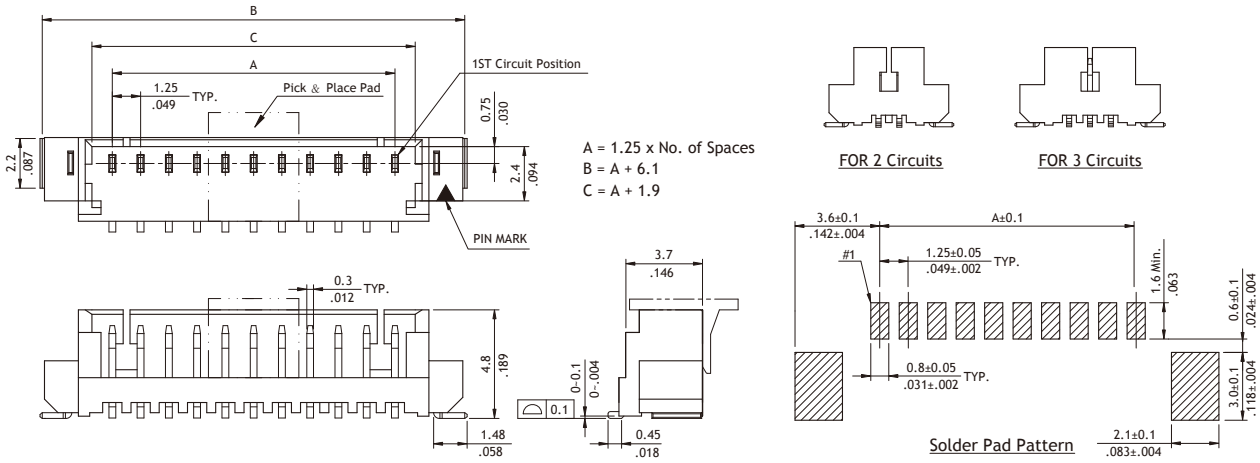

Side Entry

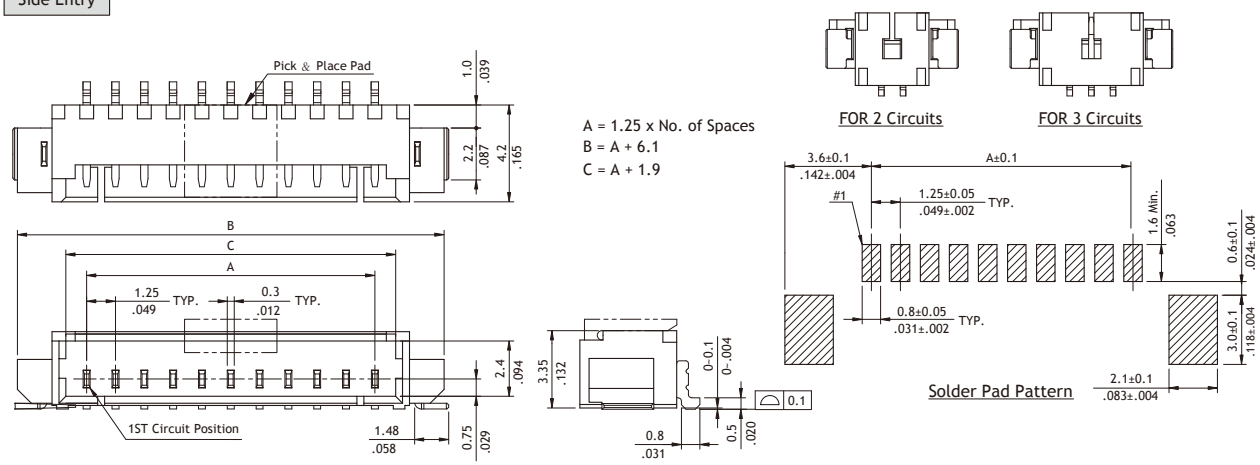

Ordering Code

①	②	③	④	⑤	⑥		⑦
CI44	15	M	1	V	R0	-	NH

① Series No.
② No. of Circuits: 02 to 15
③ M=SMT Type
④ Plating Code:
1 = Matte Tin over Nickel plated
⑤ Type: V = Top Entry
H = Side Entry

⑥ Other Options :
00 = Standard (Tube packing)
R0 = Tape & Reel (Without Pick & Place Pad)
RP = Tape & Reel (With Pick & Place Pad)
⑦ Process: -NH = For Lead Free soldering process and Halogen - Free
* Special option consult manufaturer

CI45 Series 1.25mm(.049") Wire to Board Housing & SMT Headers

◎ With locking latch provide secure mating
◎ Mate with CI45 Header
◎ Mate with CI14 crimp clip terminal (P/N: CI14T011PE0)

RoHS Compliant Pb HF

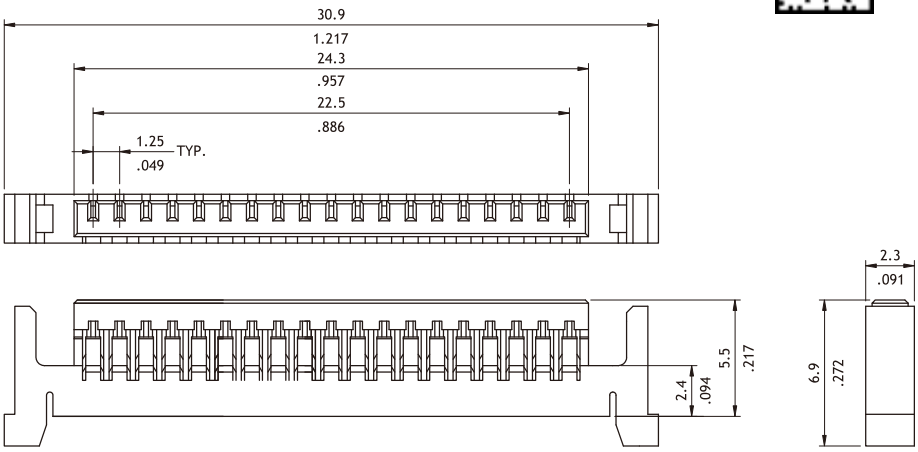

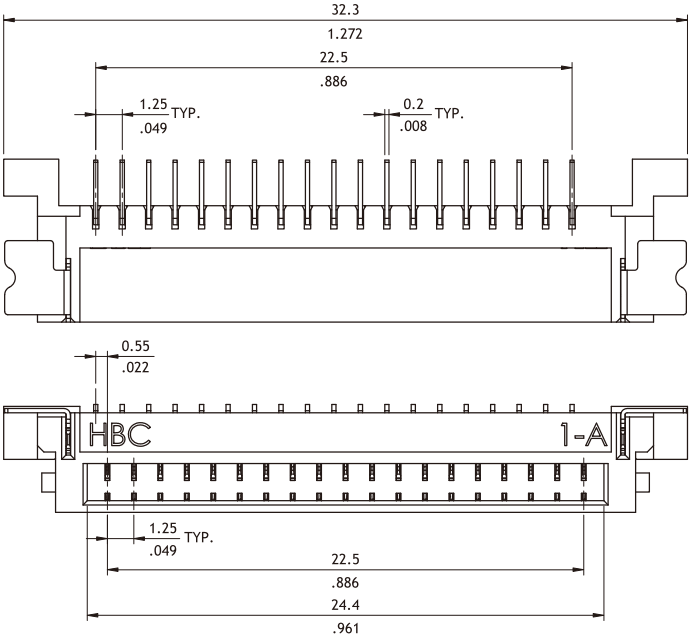

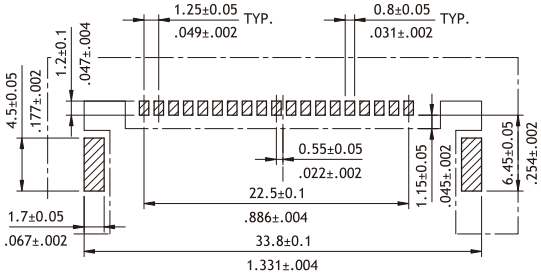

Recommended PCB Layout

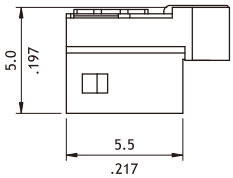

Ordering Code

① ② ③ ④ ⑤ ⑥
CI45 19 S L 0000 - NH

① Series No.
② No. of Circuits:19
③ S = Housing
④ L= With Locking Latch
⑤ Other Option: 000=Standard
⑥ Process: -NH= Halogen- Free

① ② ③ ④ ⑤ ⑥ ⑦
CI45 19 M 1 H R0 - NH

① Series No.
② No. of Circuits: 19
③ M = SMT Type
④ Plating Code: 1 = Matte Tin plated over Nickel
⑤ Type: H=Side Entry
⑥ Packing Options: R0 = Tape & Reel
⑦ Process: -NH = For Lead Free IR Process and Halogen-Free

CI46 Series 1.25mm(.049") Wire to Board Connectors Housing & Terminal

◎ With locking latch provide secure mating
◎ Mate with CI46 Header
◎ Can be used with CI46 Crimp Clip Terminal
◎ Insulator: Nylon 66 UL 94V-0, Color Nature

RoHS Compliant (HF)

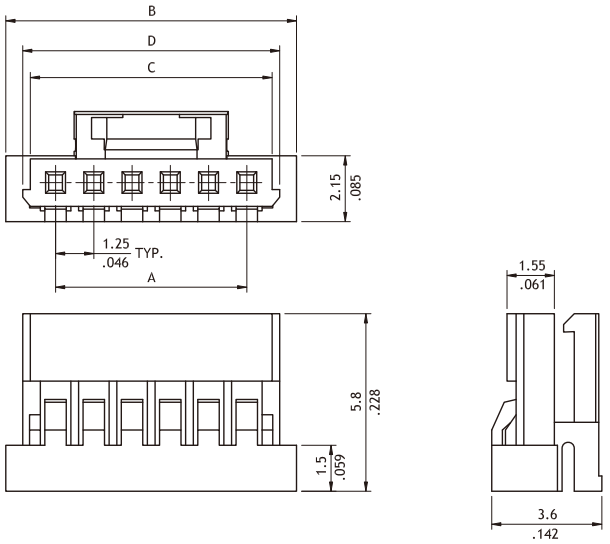

A = 1.25 x No. of Spaces
B = A + 3.25
C = A + 1.65
D = A + 2.15

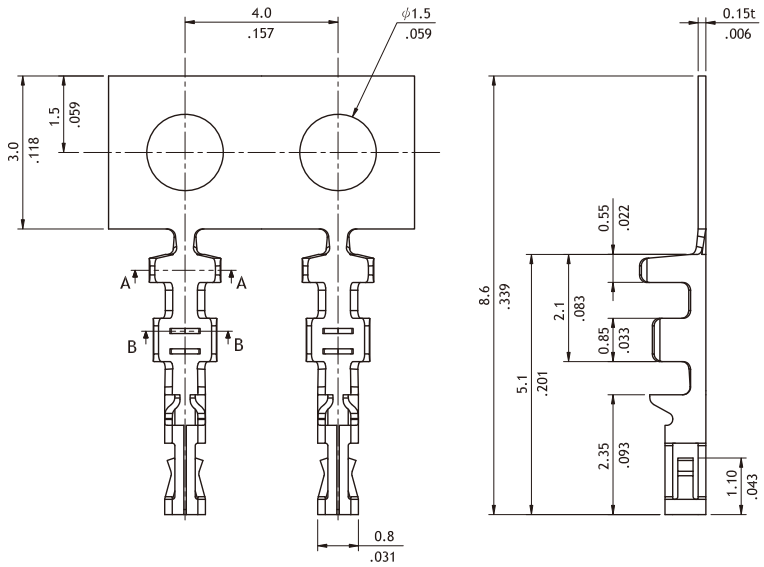

Wire Range	Insulation Diameter	Reel Q'ty
AWG #26~#32	0.90 (.035) MAX.	25,000 PCS

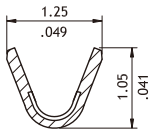

SEC. B-B

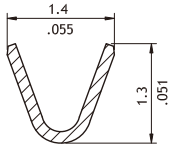

SEC. A-A

Ordering Code

①	②	③	④	⑤
CI46	20	S	L	000

① Series No.
② No. of Circuits: 02 to 20
③ S = Housing
④ L = With Locking Latch
⑤ Other Options: 000 = Standard

①	②	③	④	⑤
CI46	T01	1	P	E0

① Series No.
② Type: T01 = AWG #26 ~ #32
③ Plating Code: 1 = Tin over Nickel
④ Material: P = Phosphor Bronze
⑤ Other Options: E0 = Standard

CI46 Series 1.25mm(.049") Wire to Board Connectors SMT Headers

◎ With locks provide secure mating
◎ Fixed tabs provide PCB hold-down
◎ Mate with CI46 Housing
◎ Insulator: High temperature plastic UL 94V-0, Color Nature

RoHS Compliant

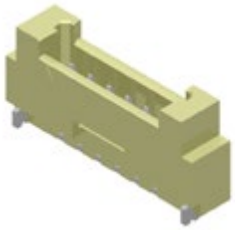

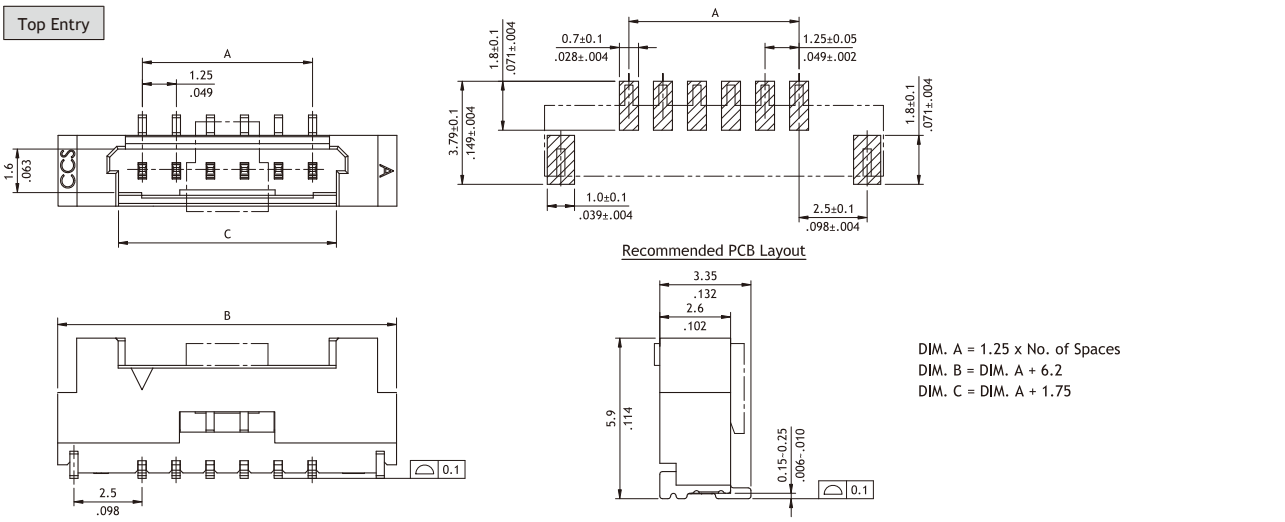

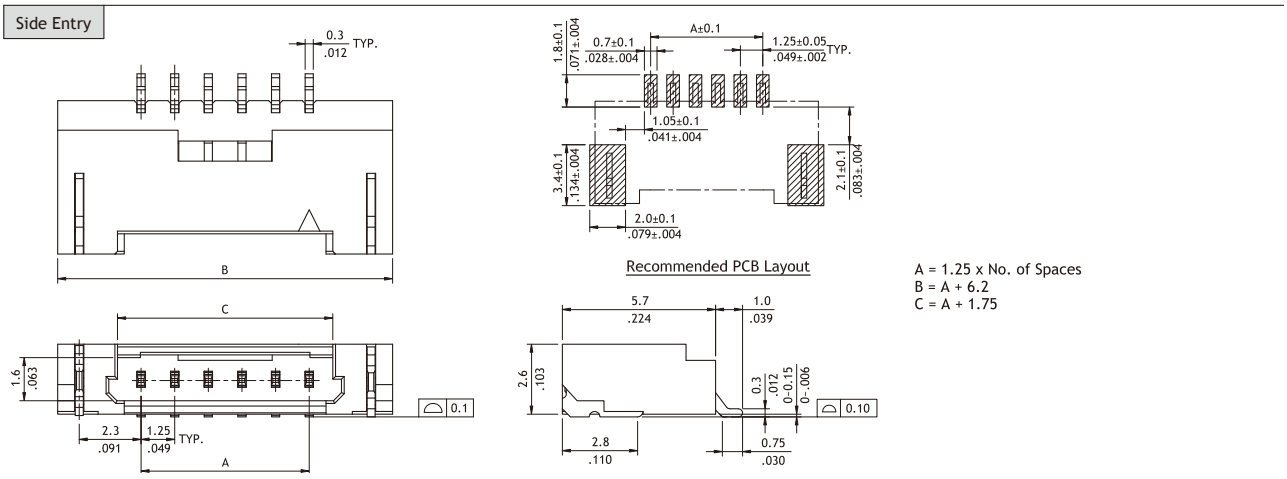

Ordering Code

①	②	③	④	⑤	⑥	⑦	⑧
CI46	20	M	1	V	R	0	- NH

① Series No.
② No. of Circuits: 02 to 20
③ M = SMT Type
④ Plating Code :
1= Matte Tin plated over Nickel
⑤ Type: V =Top Entry
H=Side Entry
⑥ Packing Options:
R0 = Tape & Reel
⑦ Other Options:
0 = Standard
⑧ Process: -NH = For Lead Free soldering process and Halogen-Free

CIDL Series 1.25mm(.049") Wire to Board Connectors

◎ Can be used with CI14 crimp clip terminal
◎ Insulator: Nylon 66 UL 94V-0, Color Nature
◎ Insulator: High temperature UL 94V-0 , Color Nature

RoHS Compliant HF

NEW

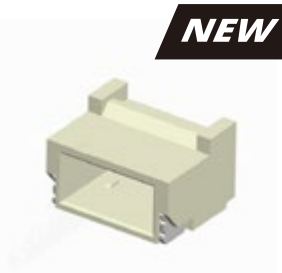

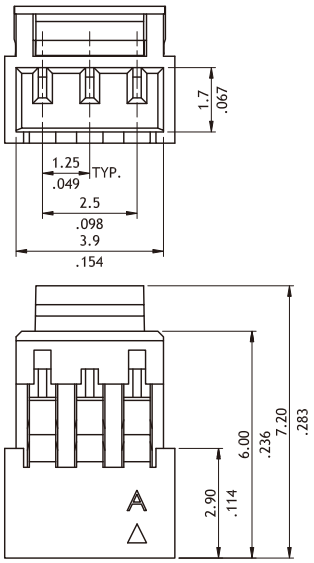

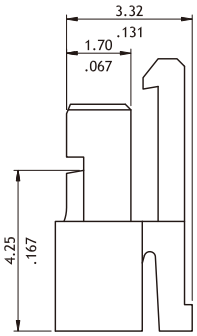

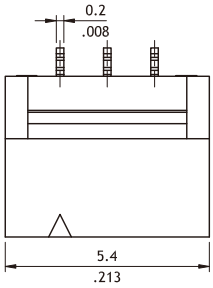

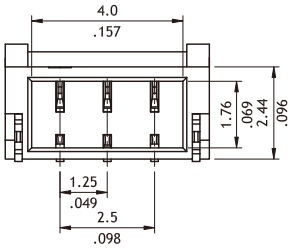

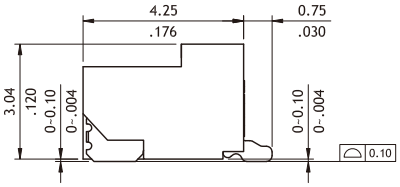

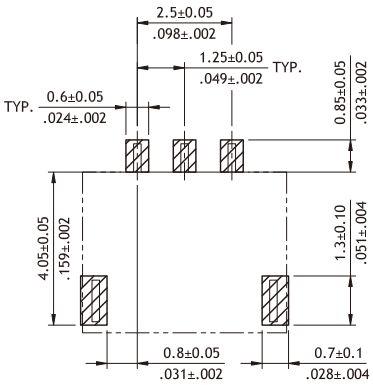

Ordering Code

① ② ③ ④ ⑤
CIDL 03 S L000 - NH

① Series No.
② No. of Circuits: 03
③ S = Connector Housing
④ Other option: L000=With Locking Latch
⑤ Other Option: -NH= Halogen-Free

① ② ③ ④ ⑤ ⑥ ⑦
CIDL 03 M 1 H R0 - NH

① Series No.
② No. of Circuits: 03
③ M=SMT type Header
④ Plating: 1=Matte Tin over Nickel
⑤ Type: H = Side Entry Type
⑥ Option : R0 = Tape & Reel Packing
⑦ Process: -NH= For Lead Free IR Processes and Halogen-Free

CIDM Series 1.25mm(.049") Wire to Board Connectors

◎ Fixed tabs provide PCB hold-down
◎ Insulator: High temperatrue plastic UL 94V-0 , Color Nature

RoHS Compliant Pb HF

NEW

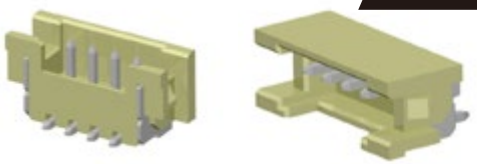

P/N CIDM**M1VR0-NH

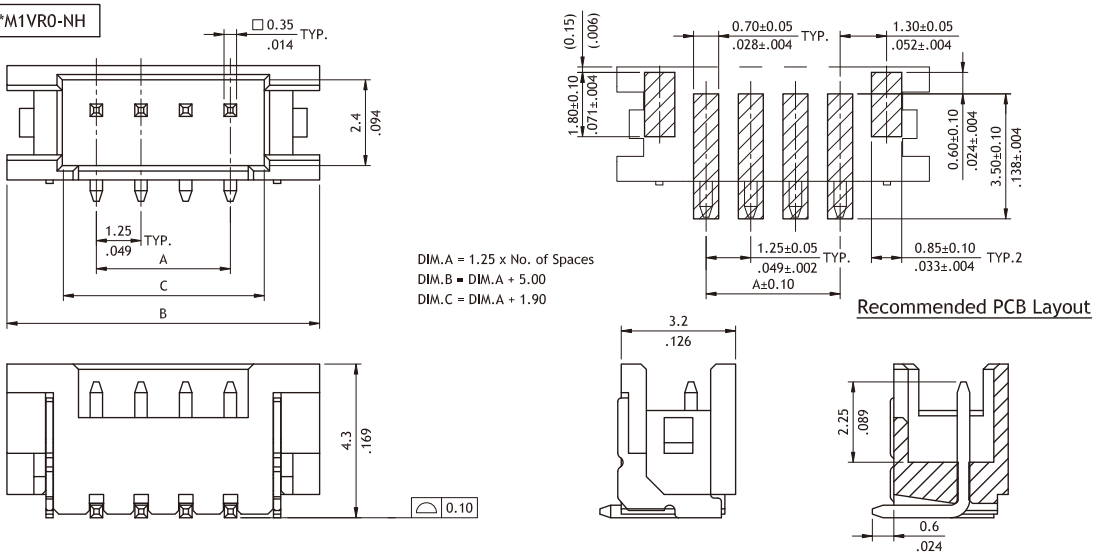

P/N CIDM**M1HR0-NH

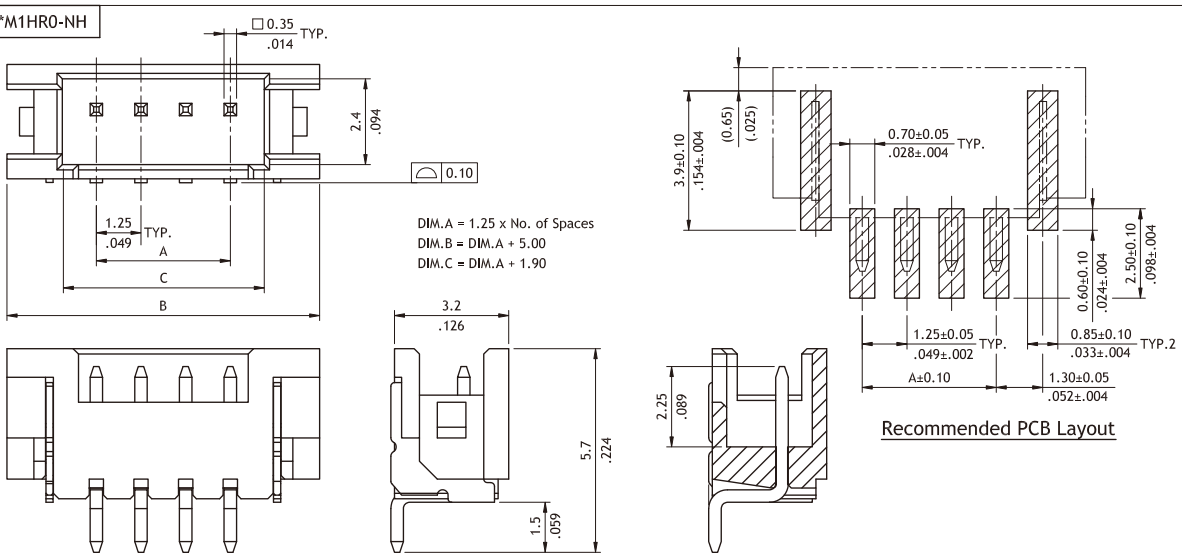

Ordering Code

①	②	③	④	⑤	⑥	⑦	⑧
CIDM	03	M	1	V	R	0	- NH

① Series No.
② No. of Circuits: 02~15
③ M= SMT Type Header
④ Plating Code: 1= Matte Tin over Nickel
⑤ Type : V = Vertical
H = Right angle
⑥ Packing Option : R = Tape & Reel Packing
⑦ Option : 0 = Nature Color
1 = Black
⑧ Process:
-NH= For Lead Free IR Processes and Halogen-Free

CI15 Series 1.50mm(.059") Wire to Board Connectors Housing & Terminal

◎ Terminal accommodated AWG #26 ~ #32
◎ Insulator: Nylon 66 UL 94V-0, Color Nature
◎ Terminal: Tin plated, Phosphor Bronze
◎ Mate with CI15 Header

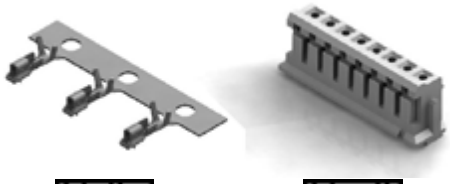

RoHS Compliant HF

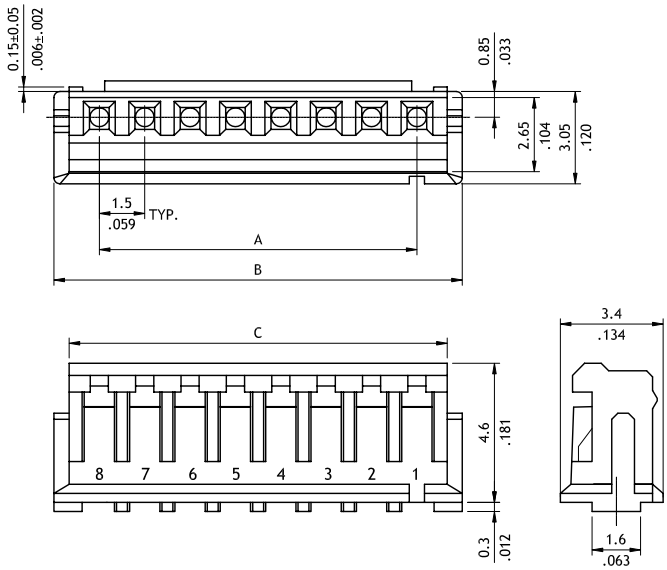

Circuits	Dimension		
	A	B	C
2	1.5(.059)	4.5(.177)	3.5(.138)
3	3.0(.118)	6.0(.236)	5.0(.197)
4	4.5(.177)	7.5(.295)	6.5(.256)
5	6.0(.236)	9.0(.354)	8.0(.315)
6	7.5(.295)	10.5(.413)	9.5(.374)
7	9.0(.354)	12.0(.472)	11.0(.433)
8	10.5(.413)	13.5(.513)	12.5(.492)
9	12.0(.472)	15.0(.591)	14.0(.551)
10	13.5(.531)	16.5(.650)	15.5(.610)
11	15.0(.591)	18.0(.709)	17.0(.669)
12	16.5(.650)	19.5(.768)	18.5(.728)
13	18.0(.709)	21.0(.872)	20.0(.787)
14	19.5(.768)	22.5(.886)	21.5(.846)
15	21.0(.827)	24.0(.945)	23.0(.905)

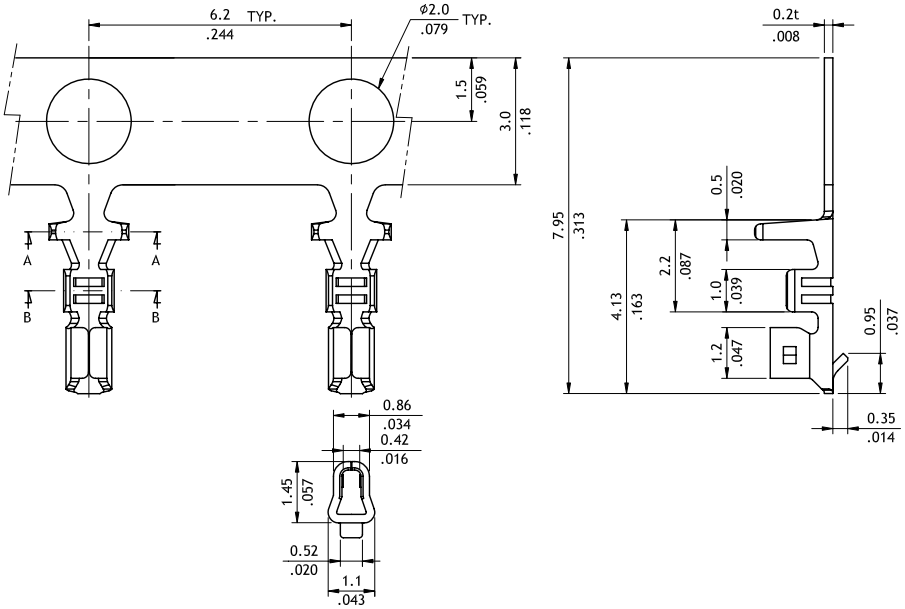

Wire Range	Insulation Diameter	Reel Q'ty
AWG #26~#32	1.10 (.043) MAX.	10,000 PCS

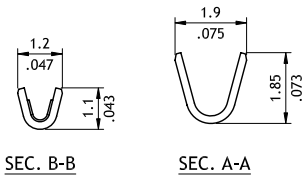

Ordering Code

① ② ③ ④
CI15 | 15 | S | 0000

① Series No.
② No. of Circuits: 02 to 15
③ S = Housing
④ Other Options: 0000 = Standard

① ② ③ ④ ⑤
CI15 | T01 | 1 | P | E0

① Series No.
② Type: T01 = AWG #26 ~ #32
③ Plating Code: 1 = Tin over Nickel
④ Material: P = Phosphor Bronze
⑤ Other Options: E0 = Standard

CI15 Series 1.50mm(.059") Wire to Board Connectors DIP Headers

- ◎ Polarization and Low-profile
- ◎ Locking slots provide secure mating
- ◎ Insulator: High temperature plastic UL 94V-0, Color
- ◎ With Tin plated DIP type contact
- ◎ Mate with CI15 Housing

RoHS Compliant

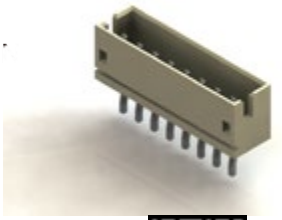

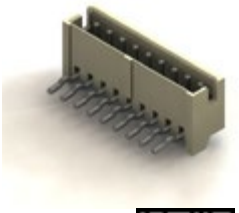

Straight

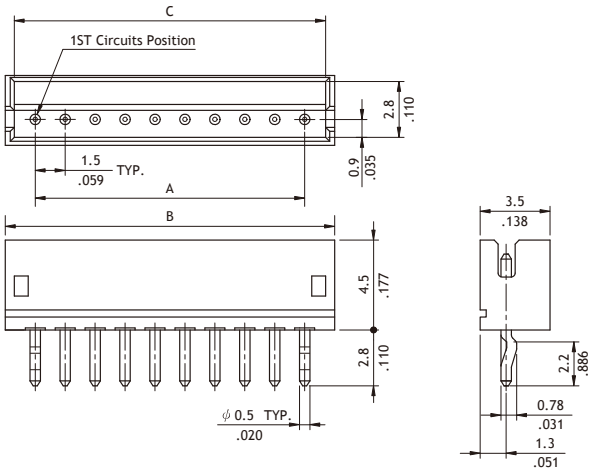

Circuits	Dimension		
	A	B	C
2	1.5(.059)	4.5(.177)	3.6(.142)
3	3.0(.118)	6.0(.236)	5.1(.201)
4	4.5(.177)	7.5(.295)	6.6(.260)
5	6.0(.236)	9.0(.354)	8.1(.319)
6	7.5(.295)	10.5(.413)	9.6(.378)
7	9.0(.354)	12.0(.472)	11.1(.437)
8	10.5(.413)	13.5(.531)	12.6(.496)
9	12.0(.472)	15.0(.591)	14.1(.555)
10	13.5(.531)	16.5(.650)	15.6(.614)
11	15.0(.591)	18.0(.709)	17.1(.673)
12	16.5(.650)	19.5(.768)	18.6(.732)
13	18.0(.709)	21.0(.827)	20.1(.791)
14	19.5(.768)	22.5(.886)	21.6(.850)
15	21.0(.827)	24.0(.945)	23.1(.909)

Right Angle

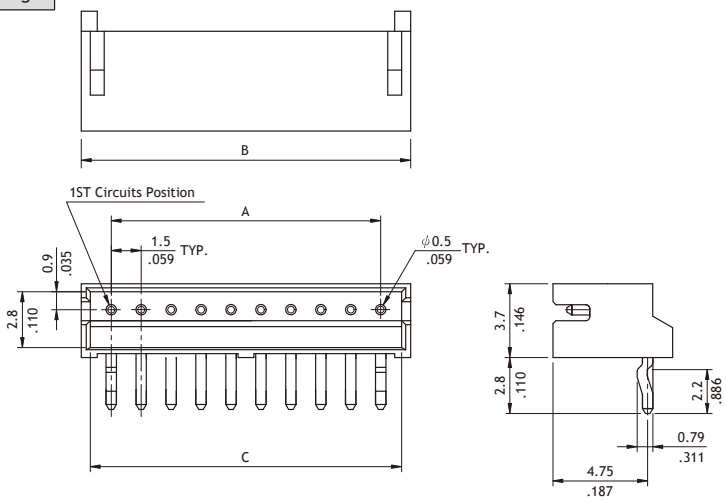

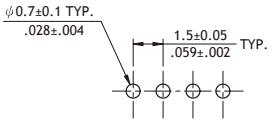

Recommended PCB Layout

Ordering Code

①	②	③	④	⑤	⑥	⑦	⑧
CI15	15	P	1	V	K	0	-NH

① Series No.
② No. of Circuits: 02 to15
③ P = DIP Type
④ Plating Code :
1= Matte Tin plated over Nickel

⑤ Type: V =Straight
H=Right Angle
⑥ K = With Pin Kinked
⑦ Other Options: 0 = Standard
⑧ Process: -NH = For Lead Free soldering process and Halogen-Free

CI15 Series 1.50mm(.059") Wire to Board Connectors SMT Headers

- ◎ Polarization and Low-profile
- ◎ Locking slots provide secure mating
- ◎ Fixed tabs provide PCB hold-down and strain-relief for SMT tails
- ◎ Insulator: High temperature plastic UL 94V-0, Color Nature
- ◎ With Tin plated SMT type contact
- ◎ Mate with CI15 Housing

RoHS Compliant HF Pb

Top Entry

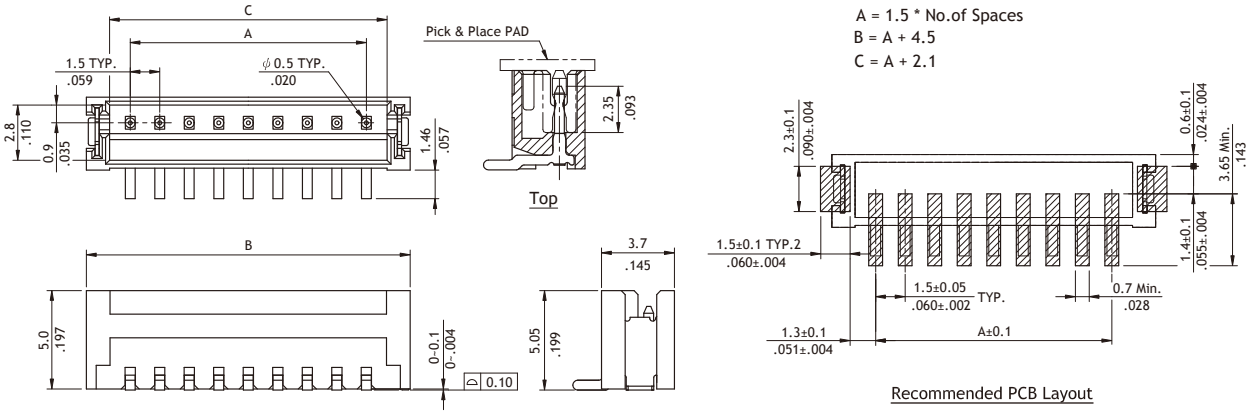

Side Entry

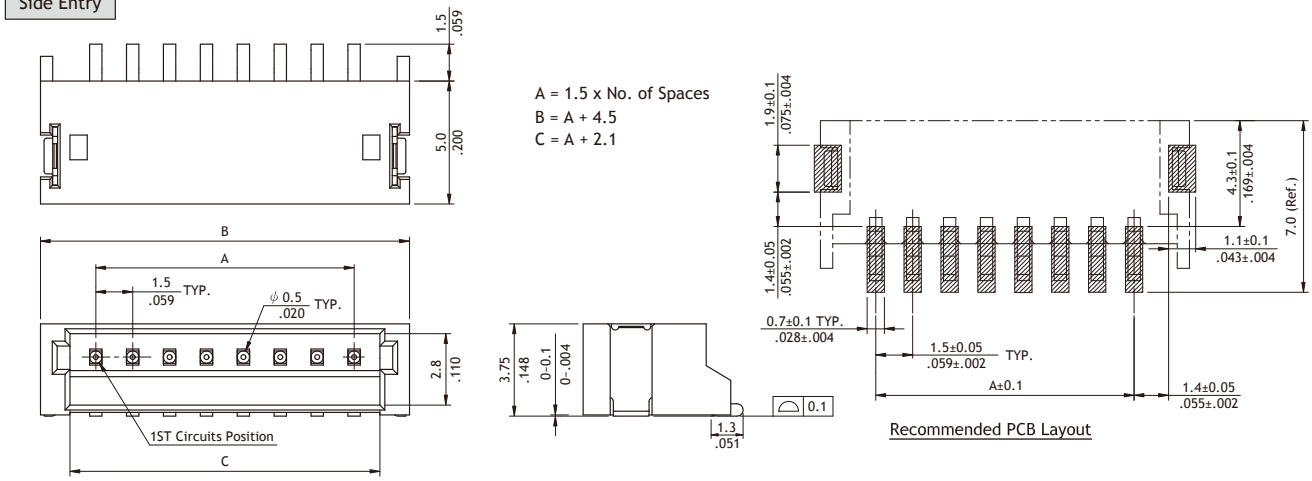

Ordering Code

①	②	③	④	⑤	⑥	⑦	⑧
CI15	15	M	1	V	R	0	- NH

① Series No.
② No. of Circuits: 02 to 15
③ M = SMT Type
④ Plating Code: 1 = Matte Tin over Nickel
⑤ Type: V = Top Entry
H= Side Entry

⑥ Packing Options:
R = Tape & Reel
T = Tube
⑦ Other Options: 0 = Standard
*Special options consult manufacturer
⑧ Process: -NH = For Lead Free soldering process and Halogen-Free

CI15 Series 1.50mm(.059") Wire to Board Latch Type Housing & SMT Header

◎ Fixed tabs provide PCB hold-down
◎ Insulator: High temperature UL 94V-0, Color Nature
◎ Housing: Nylon 66 UL 94V-0, Color Nature
◎ Housing mate with CI15 Terminal (P/N: CI15T011PE0)

RoHS Compliant

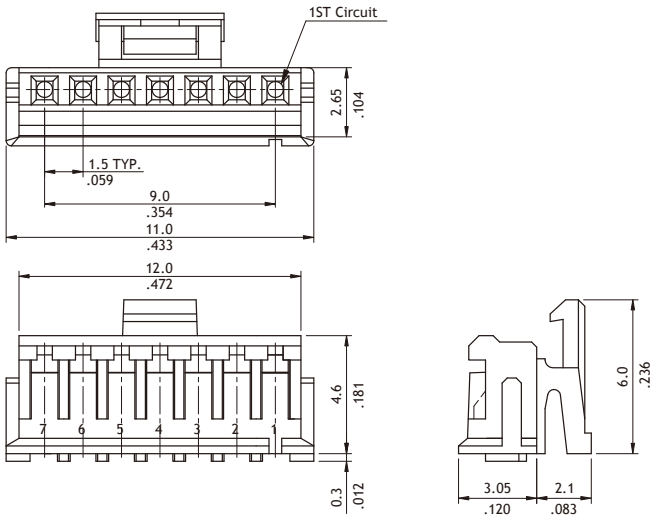

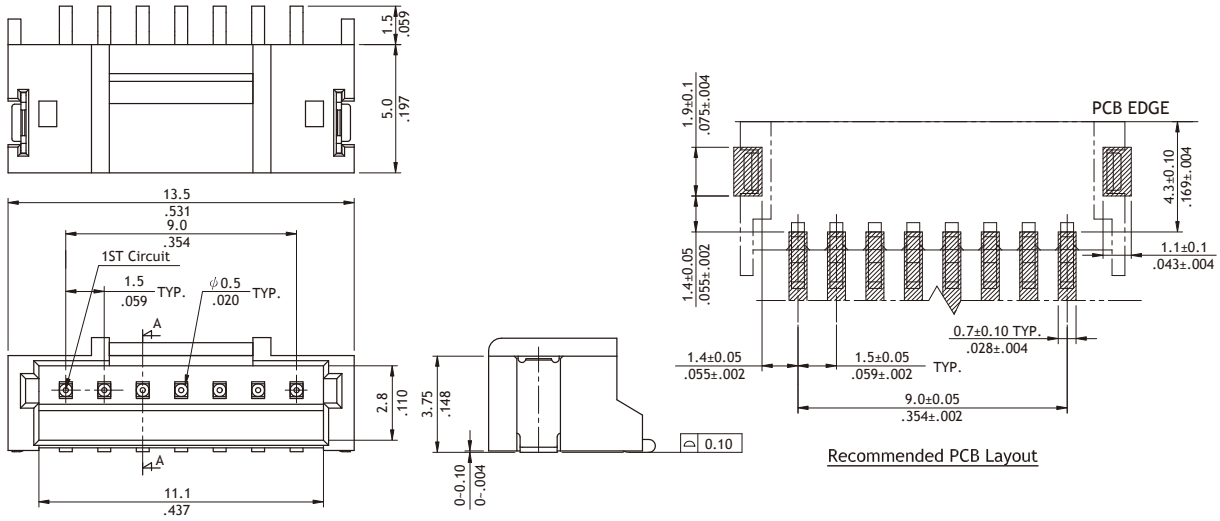

Ordering Code

①	②	③	④
CI15	07	S	L000

① Series No.
② No. of Circuits: 07
③ S = Housing
④ Other Options :
L000= Standard

①	②	③	④	⑤	⑥	⑦	⑧
CI15	07	M	1	H	T	L -	NH

① Series No.
② No. of Circuits: 07
③ M = SMT Type
④ Plating Code: 1 = Matte Tin plated over Nickel
⑤ Type: H = Right Angle
⑥ Packing Options: T = Tube (Standard) R = Tape & Reel
⑦ L = Latch Type
⑧ Process: -NH = For Lead Free IR Process and Halogen-Free

CI19 Series 1.50mm(.059") Wire to Board Connectors Housing & Terminal

◎ Mate with CI19 Header
◎ Can be used with CI19 Crimp Clip Terminal
◎ Insulator: High temperature plastic UL 94V-0, Color Nature

RoHS Compliant HF

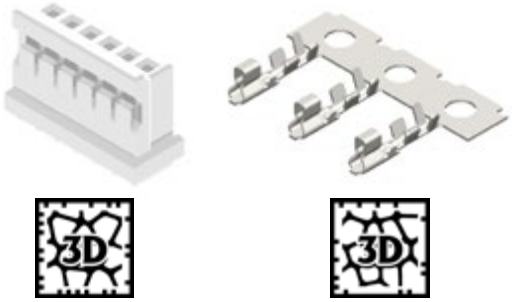

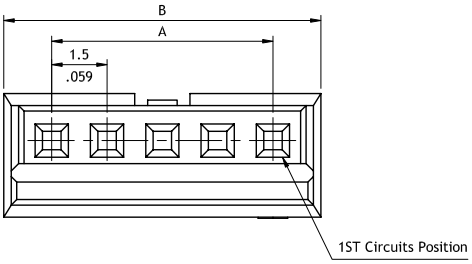

A = 1.5 * No. of Spaces
B = A + 2.6
C = A + 2.2

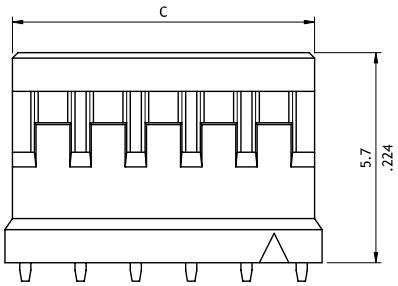

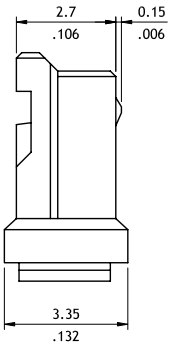

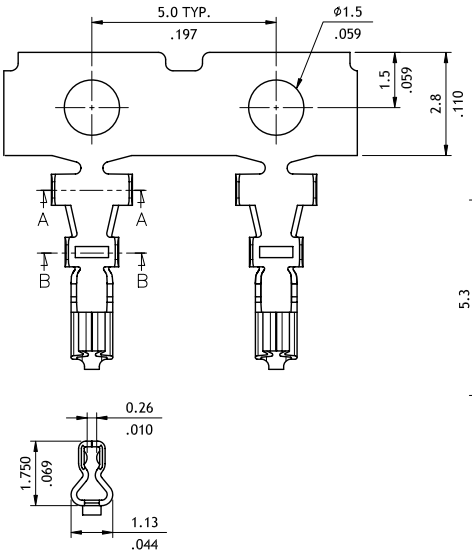

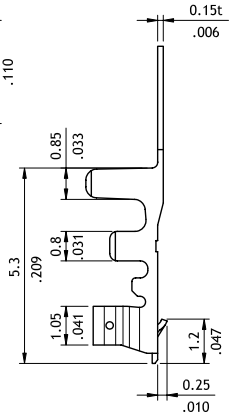

Wire Range	Insulation Diameter	Reel Q'ty
AWG #24~#30	1.1 (.043) MAX.	15,000 PCS.

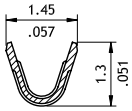

SEC.: B-B

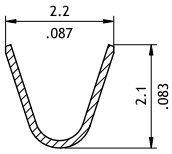

SEC.: A-A

Ordering Code

① ② ③ ④ ⑤ ⑥
CI19 08 S L 000 - NH

① Series No.
② No. of Circuits: 02 to 15
(Available: 02 to 05, 08)
③ S = Housing
④ L = With Ramp
⑤ Other Options: 000 = Standard
⑥ Process: -NH = Halogen-Free

① ② ③ ④ ⑤
CI19 T01 1 P E0

① Series No.
② Type: T01 = AWG #24 ~ #30
③ Plating Code: 1 = Tin over Nickel
④ Material: P = Phosphor Bronze
⑤ Other Option: E0 = Standard

CI19 Series 1.50mm(.059") Wire to Board Connectors SMT Headers

◎ Insulator: High temperature plastic UL 94V-0, Color Black

RoHS Compliant

Top Entry

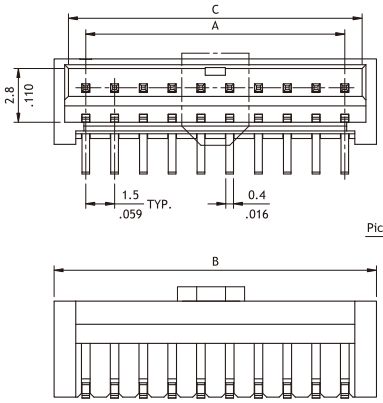

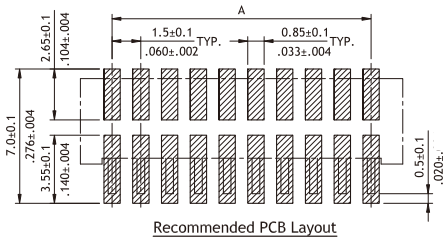

Recommended PCB Layout

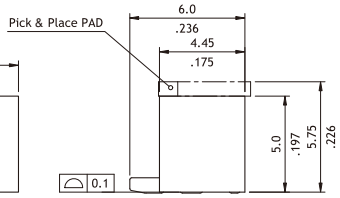

DIM. A = 1.50 x No. of Spaces
DIM. B = DIM. A + 3.3
DIM. C = DIM. A + 1.8

Side Entry

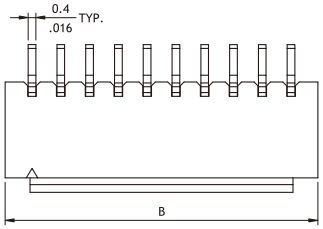

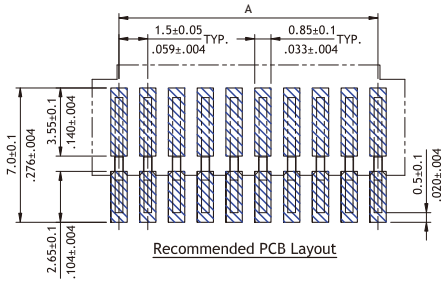

Recommended PCB Layout

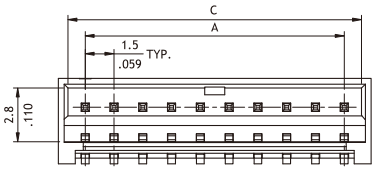

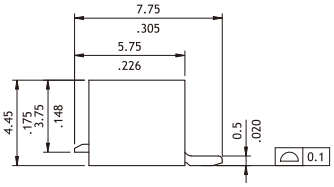

DIM. A = 1.50 x No. of Spaces
DIM. B = DIM. A + 3.3
DIM. C = DIM. A + 1.8

Ordering Code

①	②	③	④	⑤	⑥	⑦
CI19	20	M	1	H	R0	-NH

① Series No.
② No. of Circuits: 02 to 20
③ M = SMT Type
④ Plating Code:
1 = Matte Tin over Nickel
2 = Gold flash over Nickel

⑤ Type: V = Top Entry
H = Side Entry
⑥ Packing Options:
R0 = Tape & Reel
⑦ Process: -NH = For Lead Free IR Process and Halogen-Free

CI87 Series 1.50mm(.059") Wire to Board Housing & Terminal & SMT Header

◎ Locking slots provide secure mating
◎ Fixed tabs provide PCB hold-down and strain-relief for SMT tails
◎ Insulator: High temperature plastic UL 94V-0, Color Black (Header)
◎ Insulation: Nylon66 UL 94V-0, Color Nature (Housing)

RoHS Compliant HF Pb

P/N CI87**S0000

Circuits	Dimension		
	A	B	C
8	10.5(.413)	15.8(.622)	12.8(.503)
10	13.5(.531)	18.8(.740)	15.8(.622)

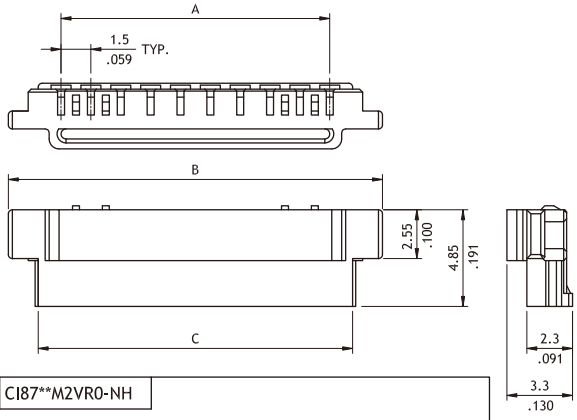

P/N CI87T012PP0

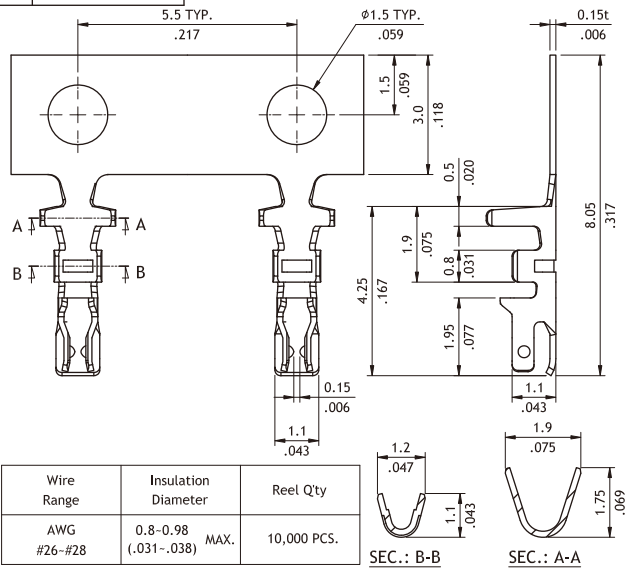

Wire Range	Insulation Diameter	Reel Q'ty
AWG #26~#28	0.8~0.98 (.031~.038) MAX.	10,000 PCS.

P/N CI87**M2VR0-NH

Circuits	Dimension		
	A	B	C
8	10.5(.413)	16.5(.650)	12.9(.508)
10	13.5(.531)	19.5(.768)	15.9(.626)

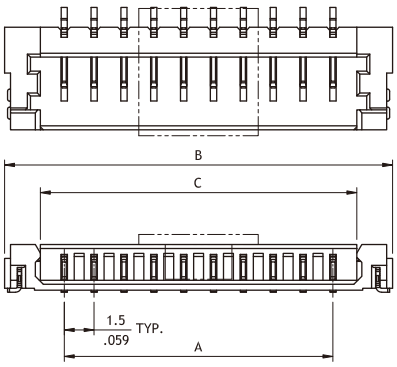

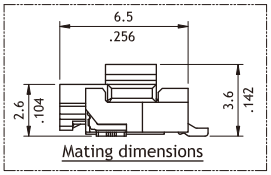

Mating dimensions

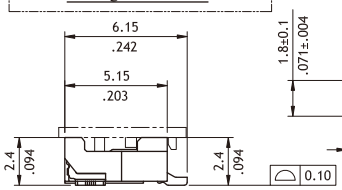

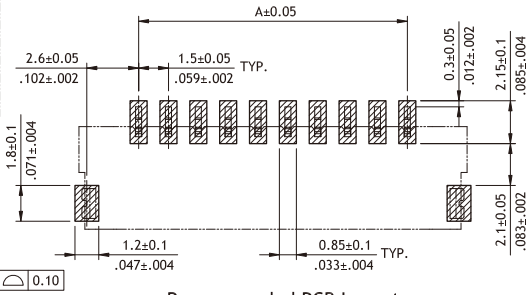

Recommended PCB Layout

Ordering Code

① ② ③ ④
CI87 10 S 0000

① Series No.
② No. of Circuits: 8,10
③ S = Housing
④ Other Options: 0000 = Standard

① ② ③ ④ ⑤ ⑥ ⑦ ⑧
CI87 10 M 2 V R 0 - NH

① Series No.
② No. of Circuits: 8,10
③ M = SMT Type
④ Plating Code:
2 = Gold plated over Nickel
⑤ Type: V = Top Entry
⑥ Packing Options: R = Tape & Reel
⑦ Other Options: 0 = Standard
⑧ Process: -NH = For Lead Free IR process and Halogen-Free

CI07 Series 1.80mm(.071") Wire to Board Connectors Housing & Terminal

◎ Mate with CI07 Header
◎ Can be used with CI07 Crimp Clip Terminal
◎ Insulator: Nylon66 UL 94V-0, Color Nature

RoHS Compliant HF

P/N CI07**S0000

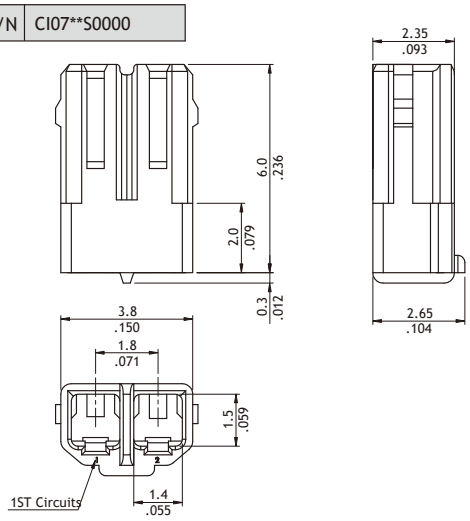

P/N CI07**SL000-NH

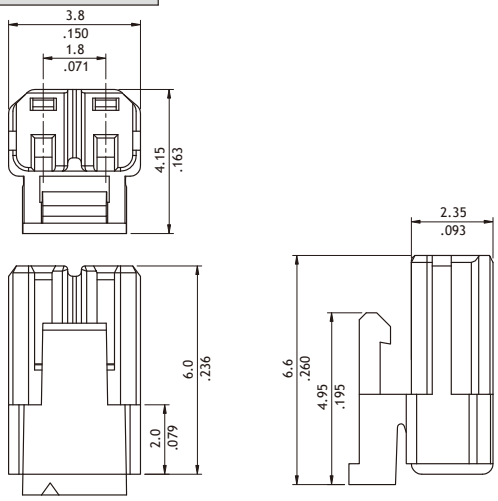

P/N CI07T021PE0

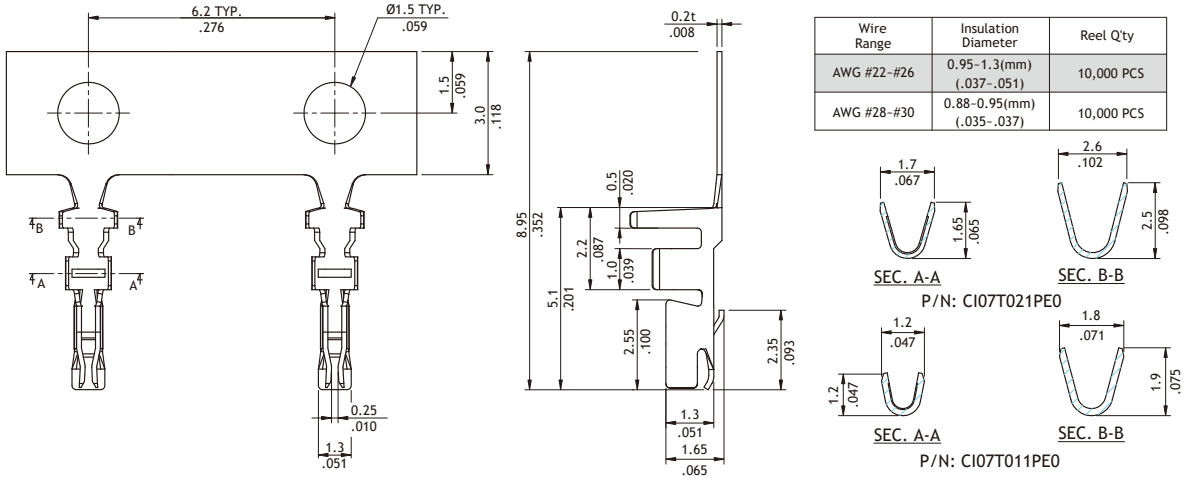

Wire Range	Insulation Diameter	Reel Q'ty
AWG #22-#26	0.95~1.3(mm) (.037~.051)	10,000 PCS
AWG #28-#30	0.88~0.95(mm) (.035~.037)	10,000 PCS

Ordering Code

① ② ③ ④

CI07 02 S L000-NH

① Series No.
② No. of Circuits: 02
③ S = Housing
④ Other Options:
0000 = Without Locking Latch
L000-NH = With Locking Latch

① ② ③ ④ ⑤

CI07 T02 1 P E0

① Series No.
② Type: T01 = AWG #28 ~ #30
T02 = AWG #22 ~ #26
③ Plating Code: 1 = Tin Plated
④ Material: P = Phosphor Bronze
⑤ Other Options: E0 = Standard

CI07 Series 1.80mm(.071") Wire to Board Connectors SMT Headers

◎ Fixed tabs provide PCB hold-down
◎ Mate with CI07 Housing
◎ Insulator: High temperature plastic UL 94V-0, Color Nature

RoHS Compliant

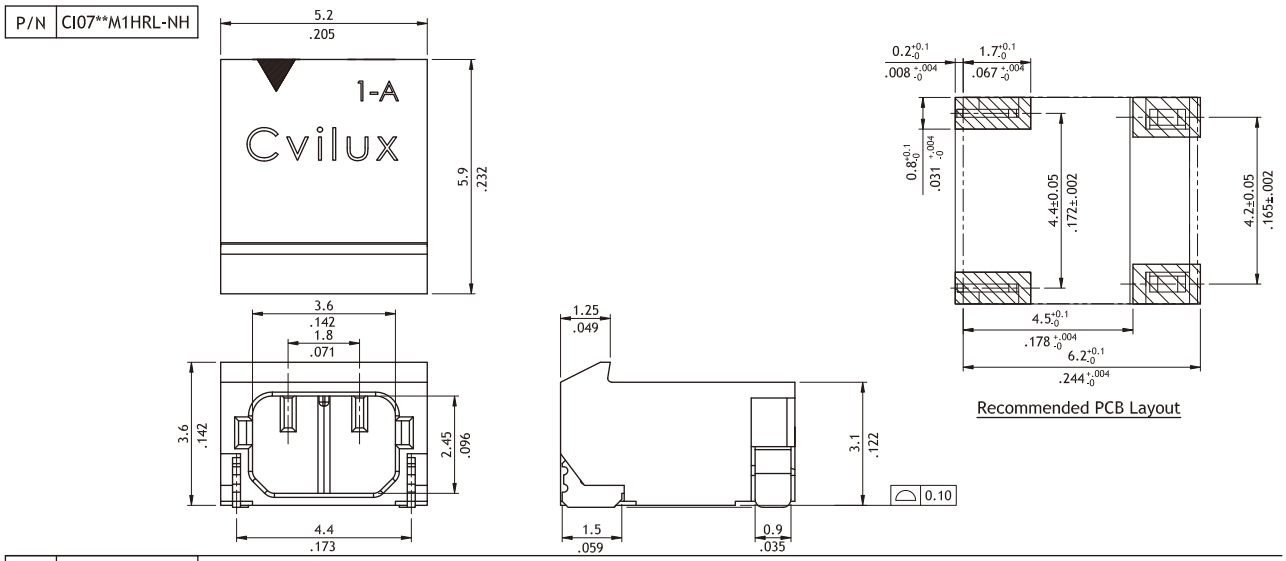

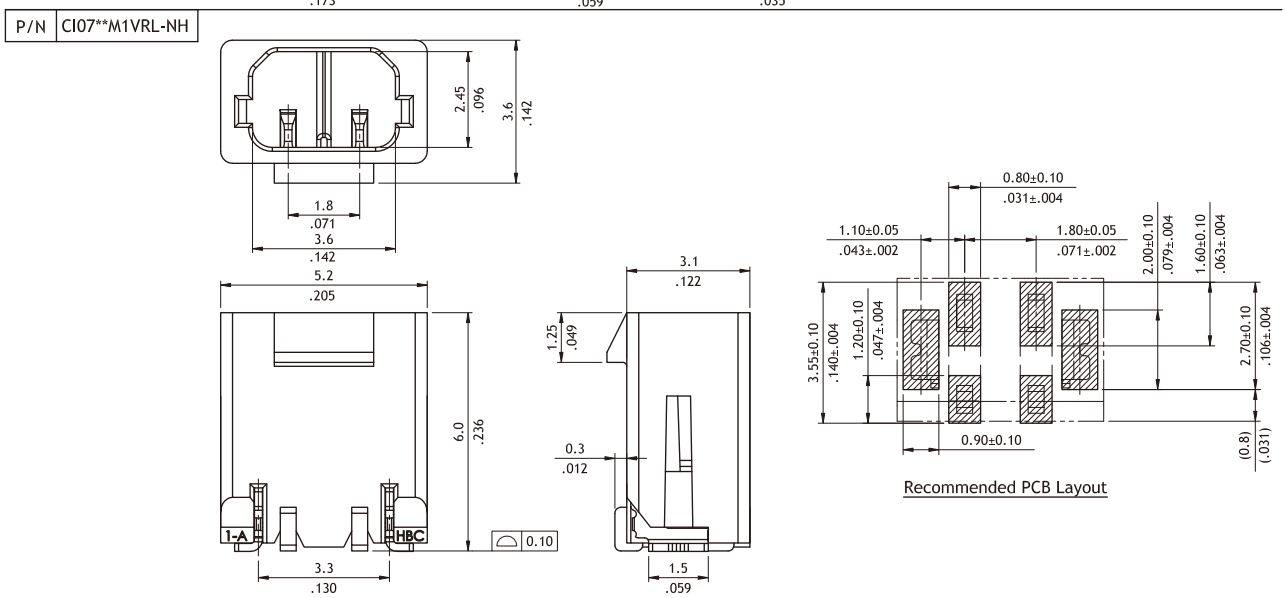

Ordering Code

①	②	③	④	⑤	⑥	⑦	⑧
CI07	02	M	1	H	R	L	- NH

① Series No.
② No. of Circuits: 02
③ M = SMT Type
④ Plating Code:
1 = Matte Tin over Nickel

⑤ Type: H = Side Entry
V = Top Entry
⑥ Packing Options: R = Tape & Reel
⑦ Other Options:
L = With Locking Ramp
⑧ Process: -NH = For Lead Free IR process and Halogen-Free

CI08 Series 2.00mm(.079") Wire to Board Connectors SMT & DIP Headers

◎ 3.0mm above the board
◎ Insulation: High temperature plastic UL 94V-0, Color Black
◎ With metal fixed tabs to secure connector in place

RoHS Compliant

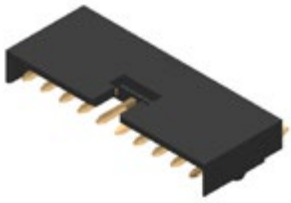

SMT TYPE

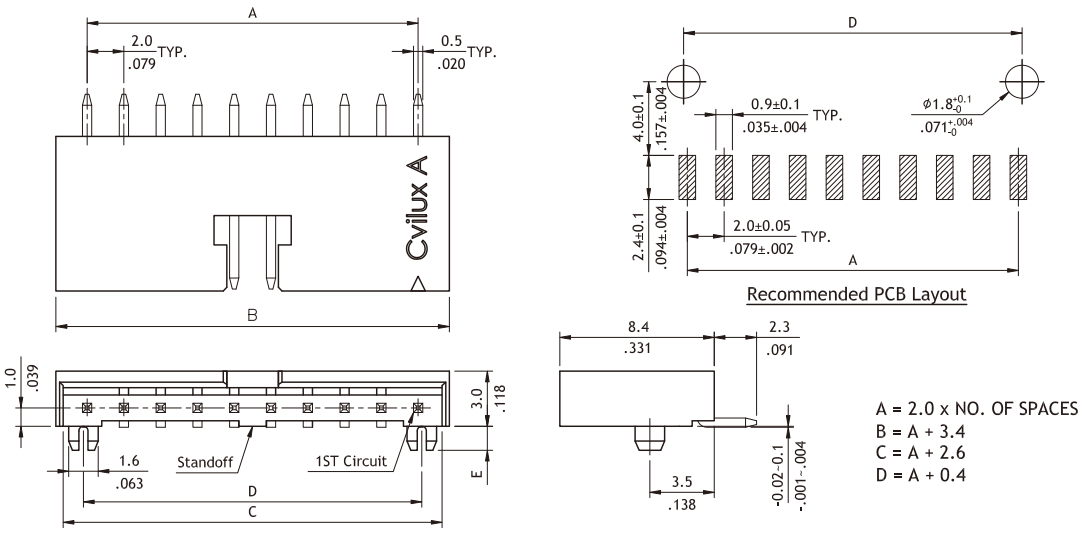

A = 2.0 x NO. OF SPACES
B = A + 3.4
C = A + 2.6
D = A + 0.4

DIP TYPE

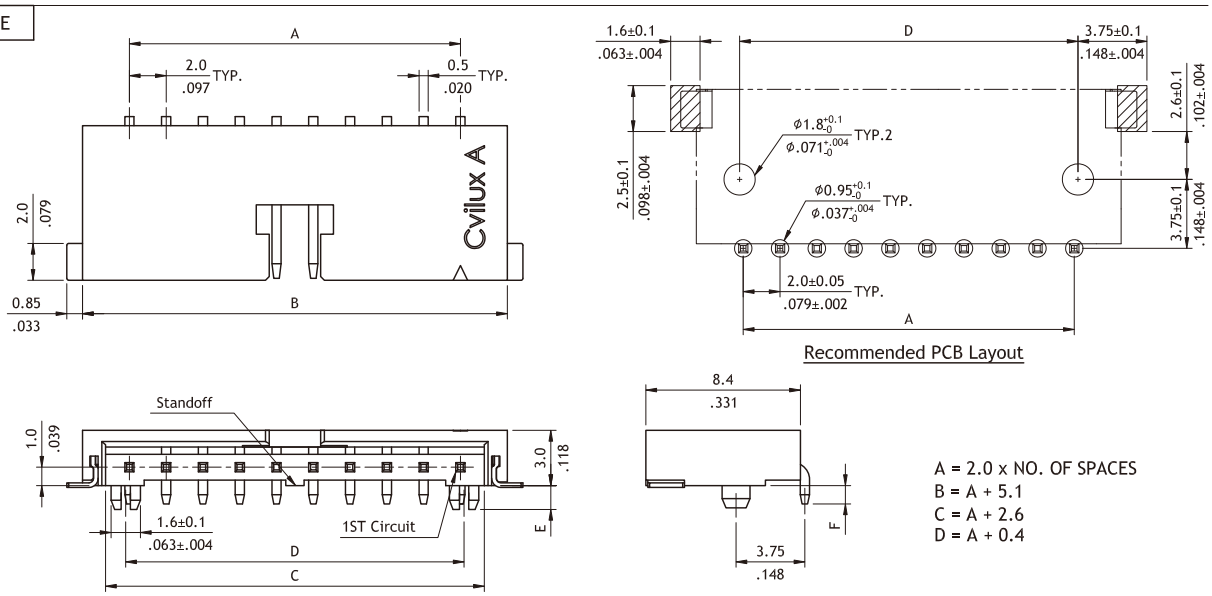

A = 2.0 x NO. OF SPACES
B = A + 5.1
C = A + 2.6
D = A + 0.4

Ordering Code

①	②	③	④	⑤	⑥	⑦	⑧
CI08	17	P	1	H	R	0	- NH

① Series No.
② No. of Circuits: 03 to 17
③ P= DIP Type
M= SMT Type
④ Plating Code:1= Matte Tin over Nickel
2=Gold flash over Nickel
⑤ Type: H=Side Entry
⑥ Packing Option: R=Tape &Reel
⑦ Other Options: 0: DIM.E=0.9(Standard)
DIM.F=1.0(DIP Type)
⑧ Process: -NH=For Lead Free IR Process and Halogen-Free

CI09 Series 2.00mm(.079") Wire to Board Connectors Housing & Terminal

◎ Mate with CI09 Header
◎ Can be used with CI09 Crimp Clip Terminal
◎ Insulator: Glass filled polyester UL 94V-0, Color Nature

RoHS Compliant

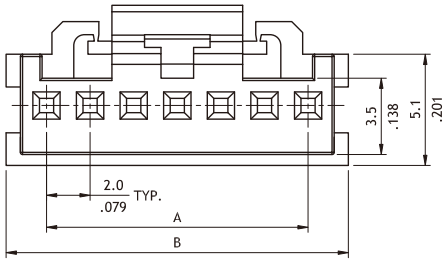

A = 2.00 x NO. OF SPACES
B = A + 3.70
C = A + 2.40

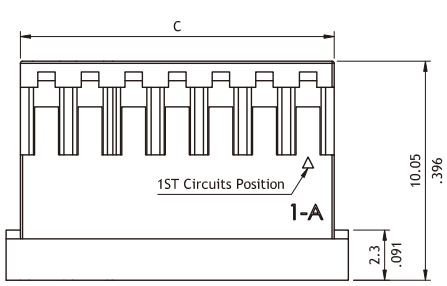

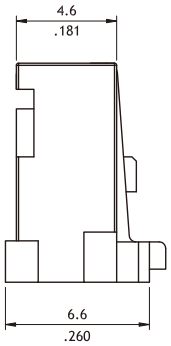

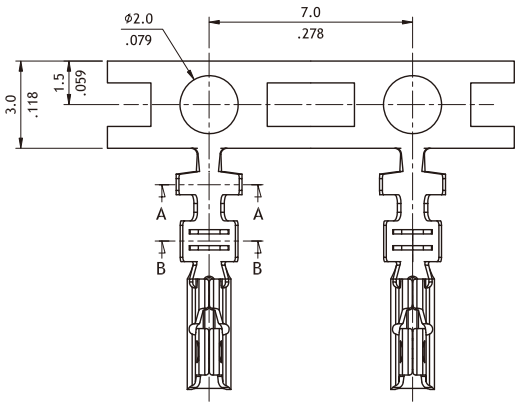

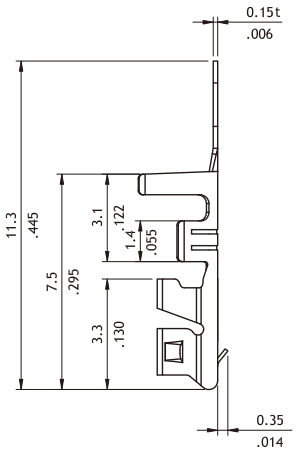

Wire Range	Insulation Diameter	Reel Q'ty
AWG #22~#26	1.5 (.060) MAX.	8,000 PCS.

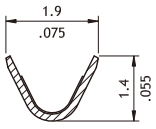

SEC.: B-B

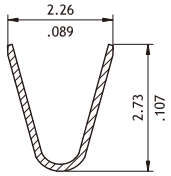

SEC.: A-A

Ordering Code

①	②	③	④	⑤	⑥		⑦
CI09	10	S	L	00	0	-	NH

① Series No.
② Contact: 02 to 10
③ S = Housing
④ L = With Latch
⑤ Color: 00 = Nature
⑥ Other Options: 0 = Standard
⑦ Process: -NH = Halogen-Free

①	②	③	④	⑤
CI09	T01	1	P	E0

① Series No
② Type: T01 = AWG #22 ~ #26
③ Plating Code: 1 = Tin over plated
④ Material: P = Phosphor Bronze
⑤ Other Options: E0 = Standard

CI09 Series 2.00mm(.079") Wire to Board Connectors DIP Headers

◎ Mate with CI09 Housing
◎ Insulator : High temperature plastic UL 94V-0, Color Nature
◎ With kinked DIP pin to secure connector in place

RoHS Compliant

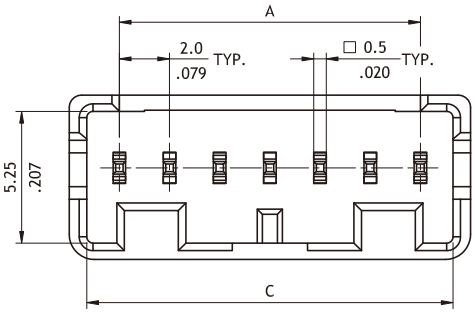

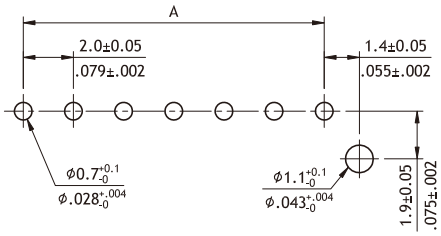

Recommended PCB Layout

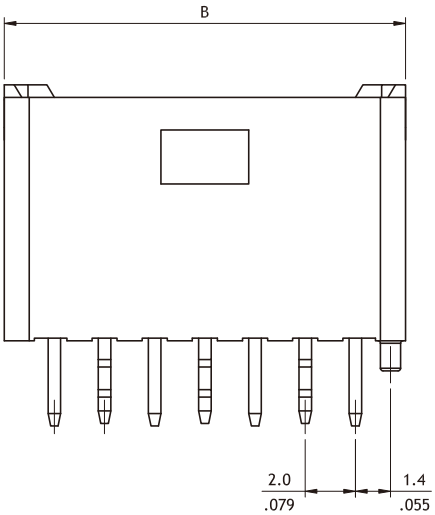

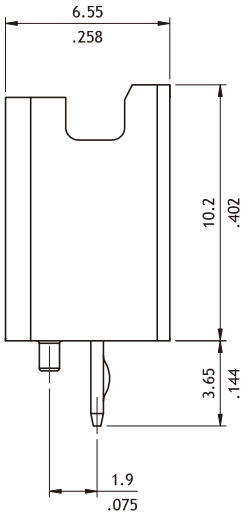

A = 2.0 x NO. OF SPACES
B = A + 4.0
C = A + 2.6

Ordering Code

①	②	③	④	⑤	⑥	⑦	⑧
CI09	10	P	1	V	K	0	-NH

① Series No.
② No. of Circuits: 02 to 10
③ P = DIP Type
④ Plating Code:
1 = Matte Tin over Nickel
⑤ Type: V = Straight
⑥ Other Options: K = Pin kinked
⑦ Color: 0 = Nature (Standard)
⑧ Process: -NH = For Lead Free IR Process and Halogen-Free

CI01 Series 2.00mm(.079") Single Row Wire to Board IDC Housing & Terminal

- ◎ Low profile Latch Housing
- ◎ Mate with CI01 Header
- ◎ Can be used CI01 Crimp Clip Terminal
- ◎ Insulator : Nylon 66 UL 94V-0 , Color Nature
- ◎ Termial : Tin plated Phosphor Bronze

RoHS Compliant HF

NEW

Crimp Type Housing :

P/N	CI01**S0000-A

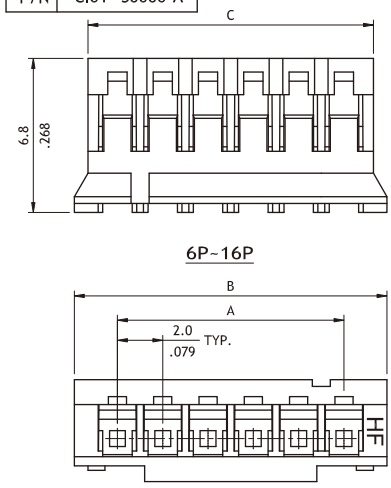

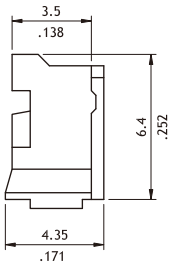

A = 2.0 x No. of Spaces
B = A + 3.8
C = A + 2.6

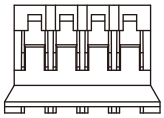

Crimp Type Terminal:

P/N	CI01T011PE0-A

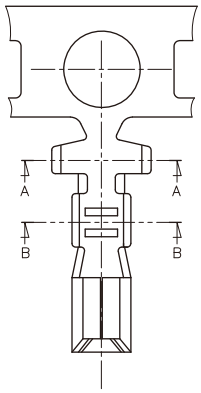

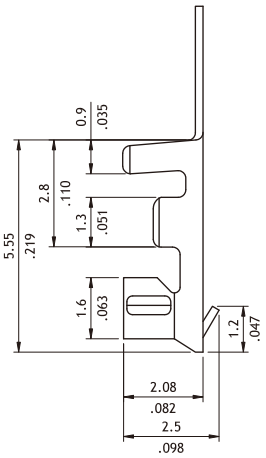

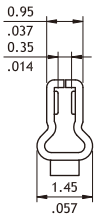

Wire Range	Insulation Diameter	Reel Q'ty
AWG #24~#28	1.50 (.059) MAX.	10,000 PCS.

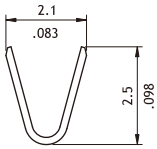

SEC.:A-A

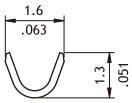

SEC.:B-B

IDC Type Housing :

P/N	CI01**S1A00

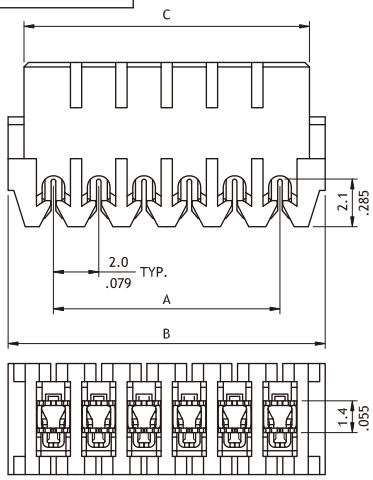

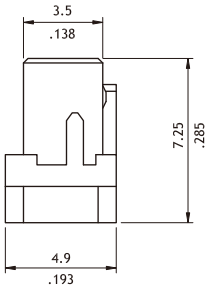

A = 2.0 x No. of Spaces
B = A + 4.0
C = A + 2.6

Wire Range	Insulation Diameter
AWG #26~#28	1.0 (.039) MAX.

Ordering Code

① ② ③ ④

C I 0 1 | 1 6 | S | 0 0 0 0 - A

① Series No.
② No. of Circuits: 02 to 16
③ S = Housing
④ Other Options: 0000-A = Standard

① ② ③ ④ ⑤ ⑥

C I 0 1 | 1 2 | S | 1 | A 0 | 0

① Series No.
② No. of Circuits: 12
③ S = IDC Type
④ Plating Code: 1: Matte Tin over Nickel
⑤ Color: A0 = Nature(#26)
A6 = Green(#28)
⑥ Options: 0 = Standard

CI01 Series 2.00mm(.079") Single Row Wire to Board DIP Headers

◎ Low profile, Pin kinked
◎ With locking slots
◎ Mate with CI01 Housing
◎ Insulator:Polyamide UL 94V-0,Color Nature
◎ With Tin plated 0.5mm square pin

RoHS Compliant

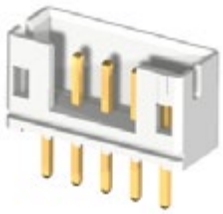

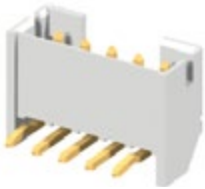

Top entry

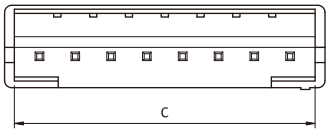

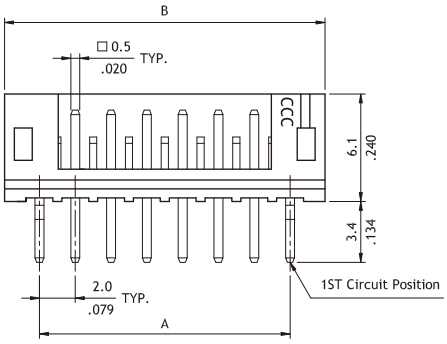

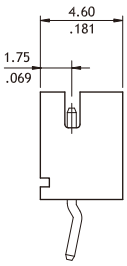

Circuits	Dimension		
	A	B	C
2	2.0(.079)	6.0(.236)	4.9(.193)
3	4.0(.157)	8.0(.315)	6.9(.272)
4	6.0(.236)	10.0(.394)	8.9(.350)
5	8.0(.315)	12.0(.472)	10.9(.429)
6	10.0(.394)	14.0(.551)	12.9(.508)
7	12.0(.472)	16.0(.630)	14.9(.587)
8	14.0(.551)	18.0(.709)	16.9(.665)
9	16.0(.630)	20.0(.787)	18.9(.744)
10	18.0(.709)	22.0(.866)	20.9(.823)
11	20.0(.787)	24.0(.945)	22.9(.902)
12	22.0(.866)	26.0(1.024)	24.9(.980)
13	24.0(.945)	28.0(1.102)	26.9(1.059)
14	26.0(1.024)	30.0(1.181)	28.9(1.138)
15	28.0(1.102)	32.0(1.260)	30.9(1.217)
16	30.0(1.181)	34.0(1.338)	32.9(1.295)

Side entry

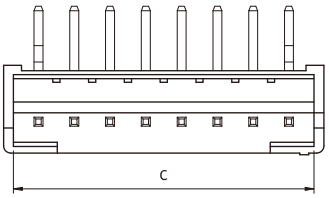

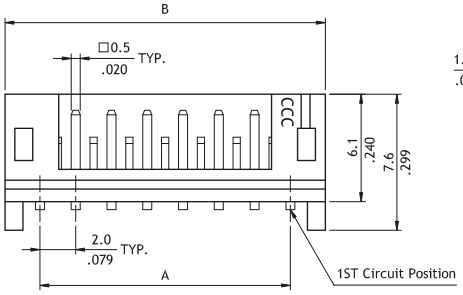

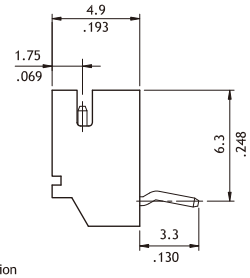

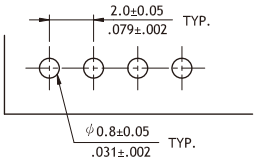

Recommended PCB Layout

Ordering Code

①	②	③	④	⑤	⑥	⑦
CI01	16	P	1	V	K0	- NH

① Series No.
② No. of Circuits: 02 to 16
③ P = DIP Type
④ Plating Code:1 = Matte Tin over Nickel
⑤ Type: V = Straight
H = Right Angle

⑥ Other Options: 00 = Without Pin Kinked
K0 = With Pin Kinked (Standard)
*Special options consult manufacturer
⑦ Process: -LF = For Lead Free soldering process
-NH = For Lead Free soldering process and Halogen-Free

CI01 Series 2.00mm(.079") Single Row Wire to Board SMT Headers

- ◎ Polarization and Low-profile
- ◎ Locking slots provide secure mating
- ◎ Fixed tabs provide PCB hold-down
- ◎ Mate with CI01 Housing
- ◎ Insulator: Polyamide UL 94V-0, Color Nature
- ◎ Termianl: Tin plated Brass

RoHS Compliant

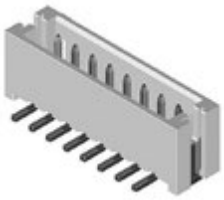

Top Entry

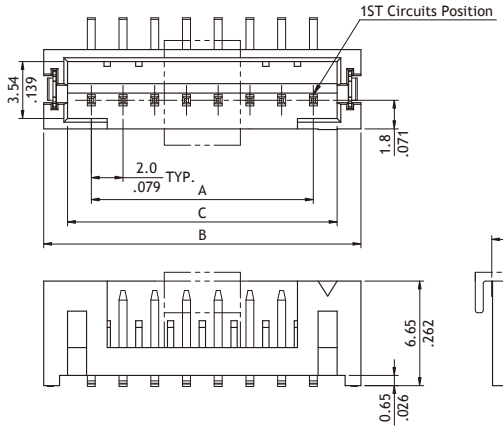

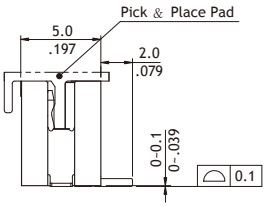

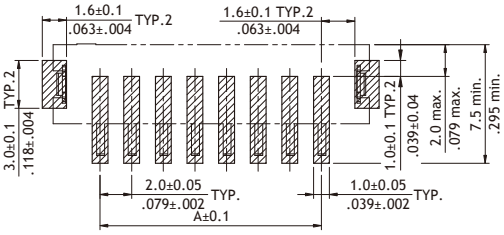

Recommended PCB Layout

Circuits	Dimension		
	A	B	C
2	2.0(.079)	8.0(.315)	5.0(.197)
3	4.0(.157)	10.0(.394)	7.0(.276)
4	6.0(.236)	12.0(.472)	9.0(.354)
5	8.0(.315)	14.0(.551)	11.0(.433)
6	10.0(.394)	16.0(.630)	13.0(.512)
7	12.0(.472)	18.0(.709)	15.0(.591)
8	14.0(.551)	20.0(.787)	17.0(.669)
9	16.0(.630)	22.0(.866)	19.0(.748)
10	18.0(.709)	24.0(.945)	21.0(.827)
11	20.0(.787)	26.0(1.024)	23.0(.906)
12	22.0(.866)	28.0(1.102)	25.0(.984)
13	24.0(.945)	30.0(1.181)	27.0(1.063)
14	26.0(1.024)	32.0(1.260)	29.0(1.142)
15	28.0(1.102)	34.0(1.339)	31.0(1.220)
16	30.0(1.181)	36.0(1.417)	33.0(1.299)

Side Entry

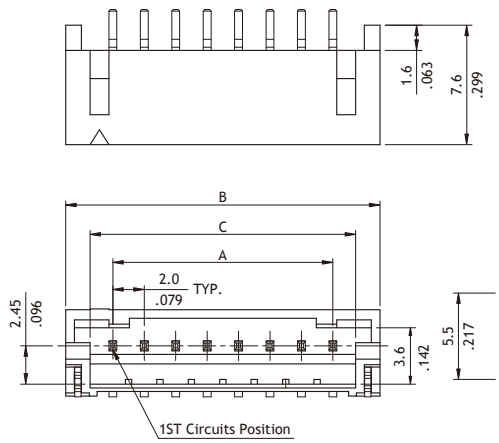

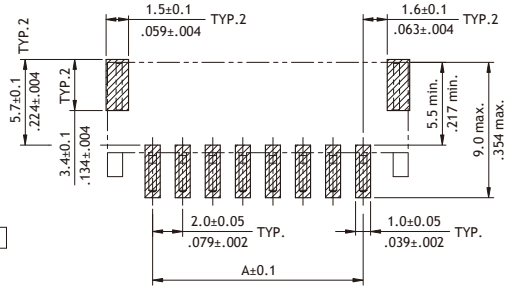

Recommended PCB Layout

Ordering Code

①	②	③	④	⑤	⑥	⑦	⑧
CI01	15	M	1	V	R	0	- NH

① Series No.
② No. of Circuits: Top Entry: 02 to 15
Side Entry: 02 to 16
③ M = SMT Type
④ Plating Code:1 = Matte Tin over Nickel
⑤ Type: V = Top Entry
H = Side Entry
⑥ Packing Options: T = Tube
R = Tape & Reel
(Top Entry type with pick & place Pad)
⑦ Other Options: 0 = Standard
*Special options consult manufacturer
⑧ Process: -LF = For Lead Free IR process
-NH = For Lead Free IR process and Halogen-Free

CI01 Series 2.00mm(.079") Single Row Wire to Board Housing & SMT Header

◎ With locking latch provide secure mating
◎ Fixed tabs provide PCB hold-down
◎ Insulator: Polyamide UL 94V-0 , Color Nature
◎ Housing: Mate with CI06 terminal (P/N: CI06T011PE0)

RoHS Compliant HF

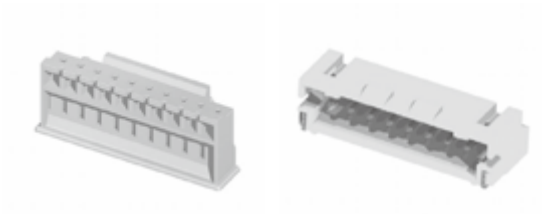

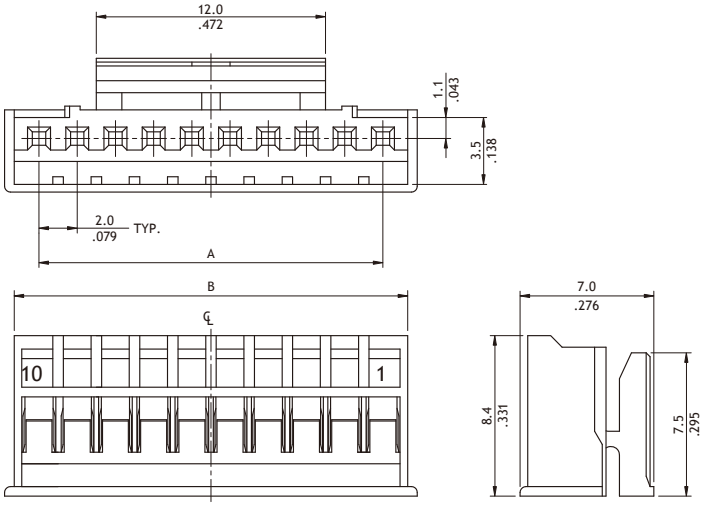

Circuits	Dimension	
	A	B
10	18.0(.709)	20.6(.811)
12	22.0(.866)	24.6(.969)
14	26.0(1.024)	28.6(1.126)
16	30.0(1.181)	32.6(1.283)

P/N CI0114M1HR0-LC

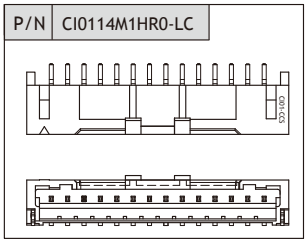

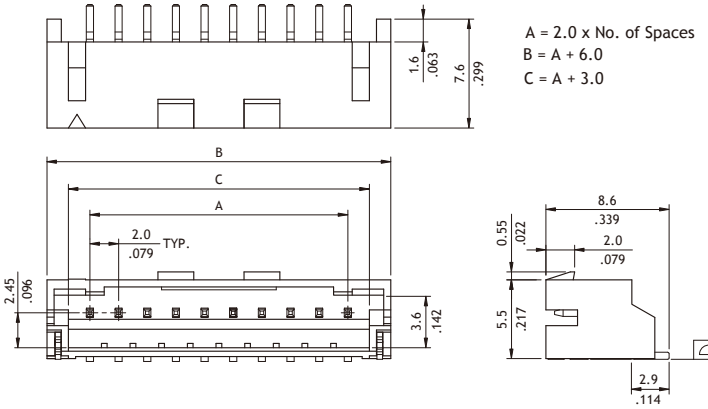

A = 2.0 x No. of Spaces
B = A + 6.0
C = A + 3.0

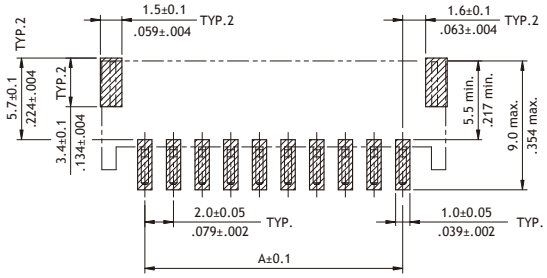

Recommended PCB Layout

Ordering Code

① ② ③ ④ ⑤
CI01 16 S 00L 0

① Series No.
② No. of Circuits: 10, 12, 14, 16
③ S = Housing
④ Latch Options:
00L = With Locking Latch
⑤ Other Options:
0 = Standard (Color Nature)
*Special options consult manufacturer

① ② ③ ④ ⑤ ⑥ ⑦ ⑧
CI01 16 M 1 H R 0 - NH

① Series No.
② No. of Circuits: 10, 12, 14, 16
③ M = SMT Type
④ Plating Code: 1 = Matte Tin over Nickel
⑤ Type: H = Side Entry
⑥ Packing Options: R = Tape & Reel ; T = Tube
⑦ Other Options: L = With Locking Latch
0 = Standard (for -LC type)
⑧ Process: -NH = For Lead Free soldering process and Halogen-Free
-LC = For Lead Free soldering process

CI01 Series 2.00mm(.079") Dual Row Wire to Board Housing & Terminal

◎ Low profile latch with housing
◎ Mate with CI01, CH71, CH72 , CH74, CH75 header
◎ Can be used with CI01 crimp clip terminal
(P/N: CI01TD21PE0)
◎ Insulator: Nylon 66 UL 94V-0 , Color Nature

RoHS Compliant

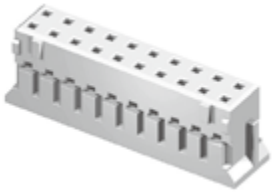

Without Latch Type

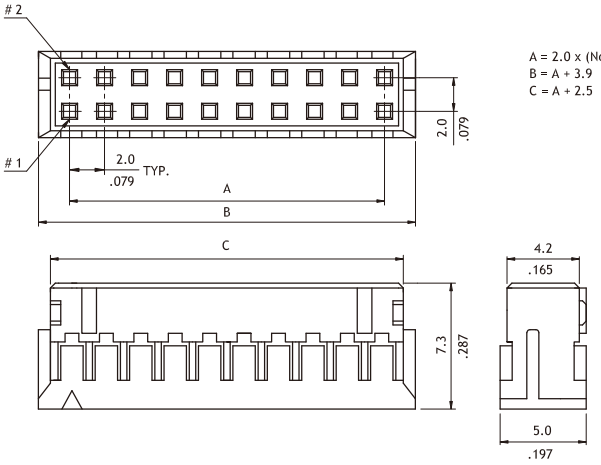

A = 2.0 x (No. of Circuits/2-1)
B = A + 3.9
C = A + 2.5

With Latch Type

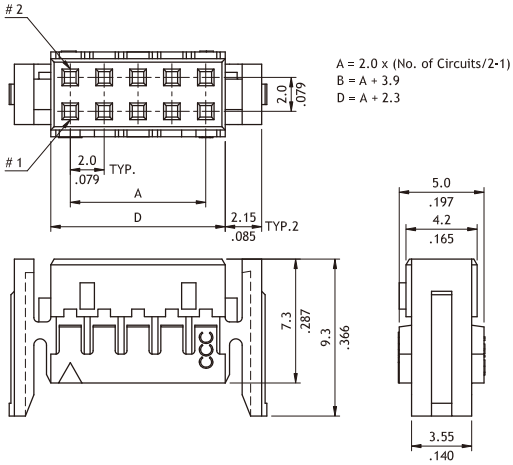

A = 2.0 x (No. of Circuits/2-1)
B = A + 3.9
D = A + 2.3

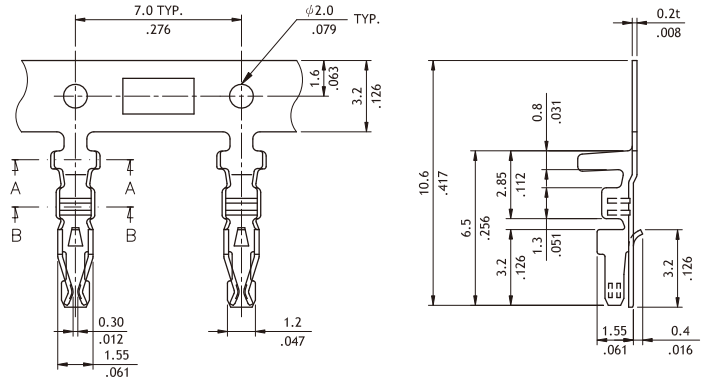

Wire Range	Insulation Diameter	Reel Q'ty
AWG #22~#28	1.60 (.063) MAX.	10,000 PCS.

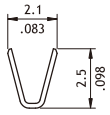

SEC.: A-A

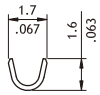

SEC.: B-B

Ordering Code

① ② ③ ④ ⑤
CI01 16 S D0 00

① Series No.
② No. of Circuits: 06 to 34
③ S = Housing
④ D0 = Dual Row Type
⑤ Other Options: 00 = Without Locking Latch
L0 = With Locking Latch
*Special options consult manufacturer

① ② ③ ④ ⑤
CI01 TD2 1 P E0

① Series No.
② Type: TD2 = AWG #22 ~ #28
③ Plating Code: 1 = Tin plated
④ Material: P = Phosphor Bronze
⑤ Other Options: E0 = Standard

CI01 Series 2.00mm(.079") Dual Row Wire to Board Connectors DIP Headers

◎ With locking slots
◎ Mate with CI01 Dual Row Housing
◎ Insulator: Polyamide UL 94V-0,Color Nature
◎ With Tin plated 0.5mm square pin

RoHS Compliant

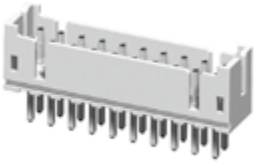

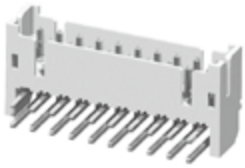

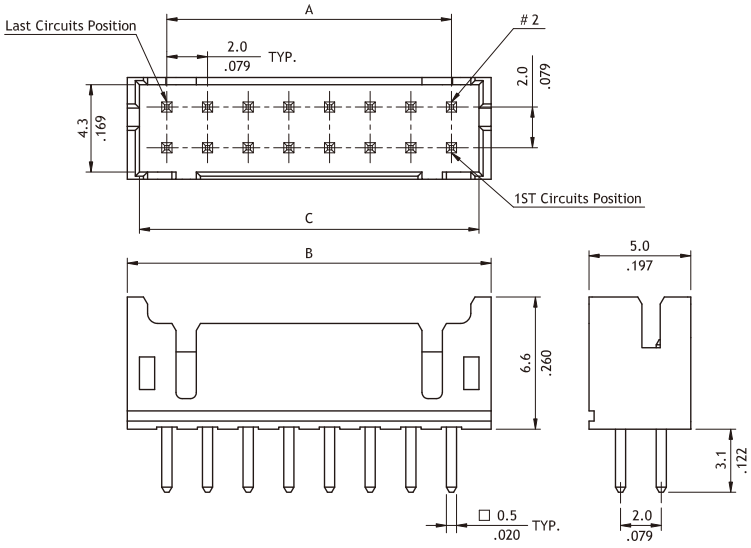

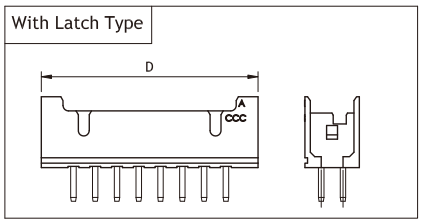

A = 2.0 x No. of Spaces
B = A + 3.9
C = A + 2.7
D = A + 5.9

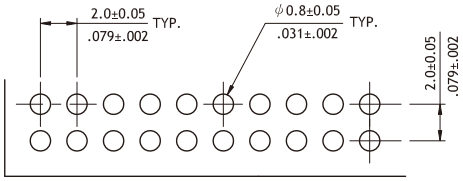

Recommended PCB Layout

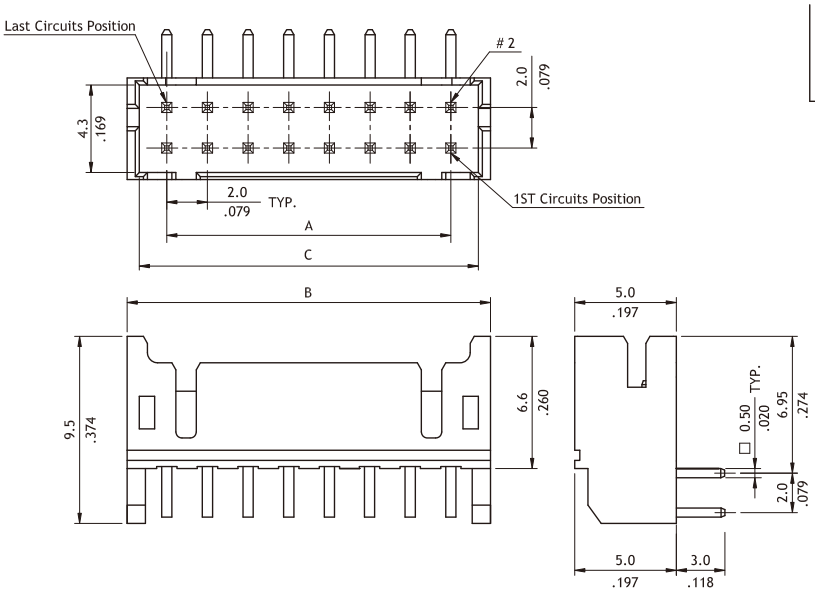

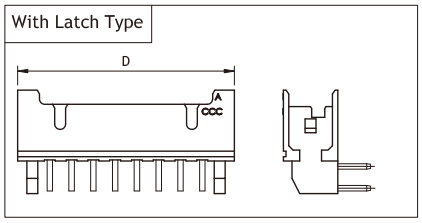

Ordering Code

①	②	③	④	⑤	⑥	⑦	⑧
CI01	34	P	1	V	D	0	- NH

① Series No.
② No. of Circuits: 06 to 34
③ P = DIP Type
④ Plating Code: 1=Matte Tin over Nickel
⑤ Type:V=Straight
H=Right Angle
⑥ D=Dual Row Header
⑦ Other Options: 0 = Standard
L = With Locking Ramp
⑧ Process: -LF = For Lead Free soldering process
-NH = For Lead Free soldering process and Halogen-Free
*Special options consult manufacturer

CI02 Series 2.00mm(.079") Board In Connectors

◎ Low profile Housing
◎ Mate with CI02 Crimp board Terminal
◎ Insulator: Nylon 66 UL 94V-0, Color Nature
◎ Terminal: Tin plated Copper alloy

RoHS Compliant HF

Circuits	Dimension	
	A	B
2	2.0(.079)	5.2(.205)
3	4.0(.157)	7.2(.283)
4	6.0(.236)	9.2(.362)
5	8.0(.315)	11.2(.441)
6	10.0(.394)	13.2(.520)
7	12.0(.472)	15.2(.598)
8	14.0(.551)	17.2(.677)
9	16.0(.630)	19.2(.756)
10	18.0(.709)	21.2(.835)
11	20.0(.787)	23.2(.913)
12	22.0(.866)	25.2(.992)
13	24.0(.945)	27.2(1.071)
14	26.0(1.024)	29.2(1.150)
15	28.0(1.102)	31.2(1.228)
16	30.0(1.181)	33.2(1.307)
17	32.0(1.260)	35.2(1.386)
18	34.0(1.339)	37.2(1.465)
19	36.0(1.417)	39.2(1.543)
20	38.0(1.496)	41.2(1.622)

P/N CI02**S0000-A

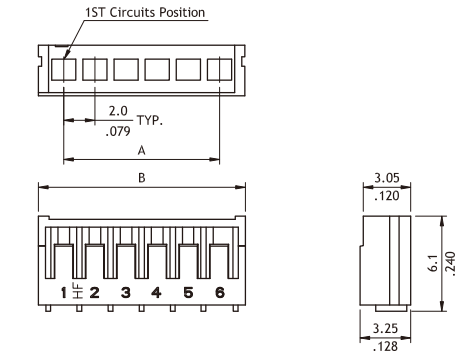

P/N CI02**S000H-A

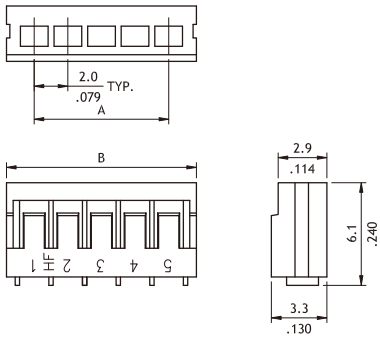

P/N CI02T021*P0-A

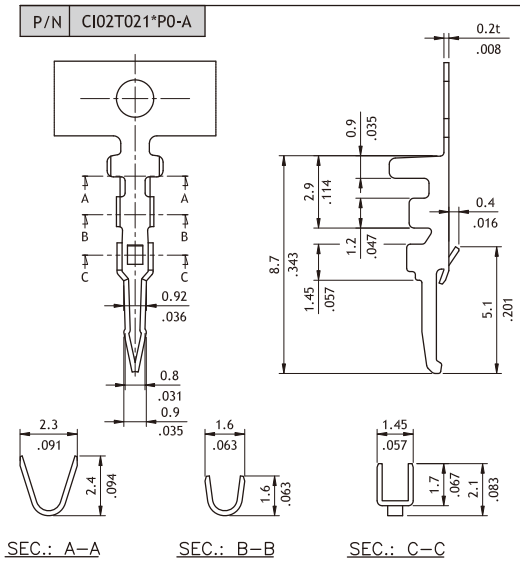

P/N CI02T021*PH-A

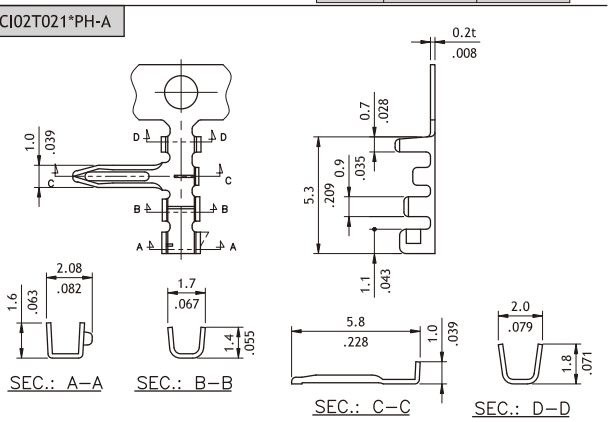

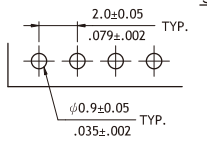

Recommended PCB Layout

Part No.	Wire Range	Insulation Diameter	Reel Q'ty
CI02T021*P0-A	AWG #24~#28	1.40 (.055) MAX.	10,000 PCS.
CI02T021*PH-A	AWG #26~#28	1.45 (.057) MAX.	10,000 PCS.

Ordering Code

① ② ③ ④

C I 0 2 | 2 0 | S | 0 0 0 0 - A

① Series No.
② No. of Circuits: 02 to 20
③ S = Housing
④ Other Options:
0000 - A = For Straight Terminal
000H - A = For Right Angle Terminal
*Special options consult manufacturer

① ② ③ ④ ⑤

C I 0 2 | T 0 2 | 1 | P | P 0 - A

① Series No.
② Type: T02 = AWG #24 ~ #28 (Straight)
T02 = AWG #26 ~ #28 (Right Angle)
③ Plating Code: 1 = Tin over Nickel plated
④ Material: P = Phosphor Bronze ; B = Brass
⑤ Terminal Style: P0 - A = Straight
PH - A = Right Angle

CI06 Series 2.00mm(.079") Wire to Board Connectors Housing & Terminal

◎ With locking latch provides secure mating
◎ Mate with CI06 Header
◎ Can be used with CI06 Crimp Clip Terminal
◎ Insulator: Nylon 66 UL 94V-0,Color Nature

RoHS Compliant

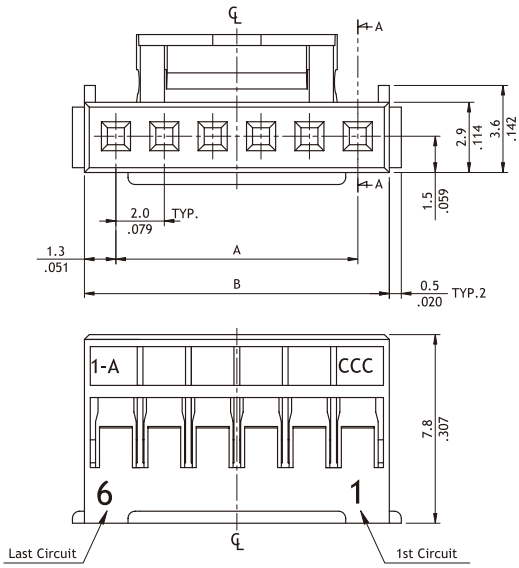

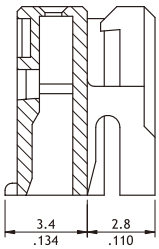

SEC A-A

Circuits	Dimension	
	A	B
2	2.0(.079)	4.6(.181)
3	4.0(.157)	6.6(.260)
4	6.0(.236)	8.6(.339)
5	8.0(.315)	10.6(.417)
6	10.0(.394)	12.6(.496)
7	12.0(.472)	14.6(.575)
8	14.0(.551)	16.6(.654)
9	16.0(.630)	18.6(.732)
10	18.0(.709)	20.6(.811)
11	20.0(.787)	22.6(.890)
12	22.0(.866)	24.6(.969)
13	24.0(.945)	26.6(1.047)
14	26.0(1.024)	28.6(1.126)
15	28.0(1.102)	30.6(1.205)
16	30.0(1.181)	32.6(1.283)

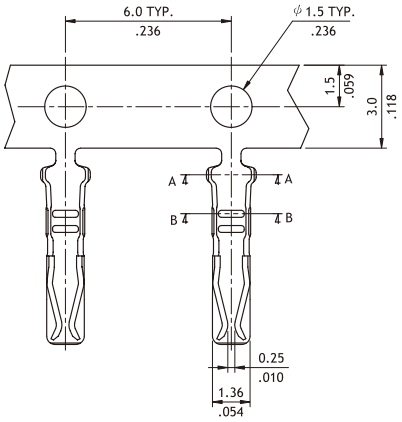

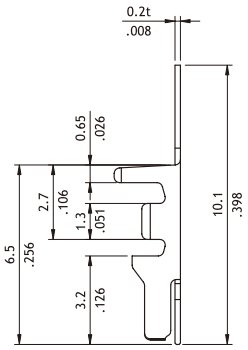

Wire Range	Insulation Diameter	Reel Q'ty
AWG #24~#30	0.80 (.031) Min. 1.45 (.057) MAX.	10,000 PCS.

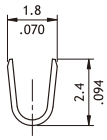

A-A SEC.

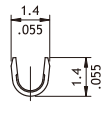

B-B SEC.

Ordering Code

① ② ③ ④

C I 0 6	1 6	S	0 0 0 0

① Series No.
② No. of Circuits: 02 to 16
③ S = Housing
④ Other Options: 0000 = Standard
*Special options consult manufacturer

① ② ③ ④ ⑤

C I 0 6	T 0 1	1	P	E 0

① Series No.
② Type: T01 = AWG #24 ~ #30
③ Plating Code: 1 = Tin over Nickel
④ Material: P = Phosphor Bronze
⑤ Other Options: E0 = Standard

CI06 Series 2.00mm(.079") Wire to Board Connectors DIP & SMT Headers

◎ With locks provide secure mating
◎ Mate with CI06 housing
◎ Insulator: Polyamide UL 94V-0 , Color Nature
◎ With Tin plated 0.5mm square pin

RoHS Compliant HF

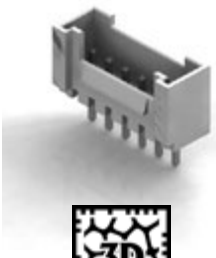

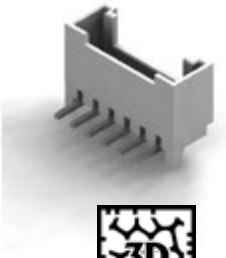

Straight DIP

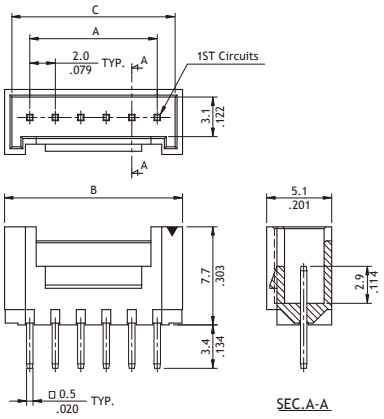

Circuits	Dimension		
	A	B	C
2	2.0(.079)	5.96(.235)	4.8(.189)
3	4.0(.157)	7.96(.313)	6.8(.268)
4	6.0(.236)	9.96(.392)	8.8(.346)
5	8.0(.315)	11.96(.471)	10.8(.425)
6	10.0(.394)	13.96(.550)	12.8(.504)
7	12.0(.472)	15.96(.628)	14.8(.583)
8	14.0(.551)	17.96(.707)	16.8(.661)
9	16.0(.630)	19.96(.786)	18.8(.740)
10	18.0(.709)	21.96(.865)	20.8(.819)
11	20.0(.787)	23.96(.943)	22.8(.898)
12	22.0(.866)	25.96(1.022)	24.8(.976)
13	24.0(.945)	27.96(1.101)	26.8(1.055)
14	26.0(1.024)	29.96(1.180)	28.8(1.134)
15	28.0(1.102)	31.96(1.258)	30.8(1.213)
16	30.0(1.181)	33.96(1.337)	32.8(1.291)

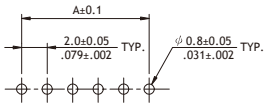

Recommended PCB Layout

Right Angle DIP

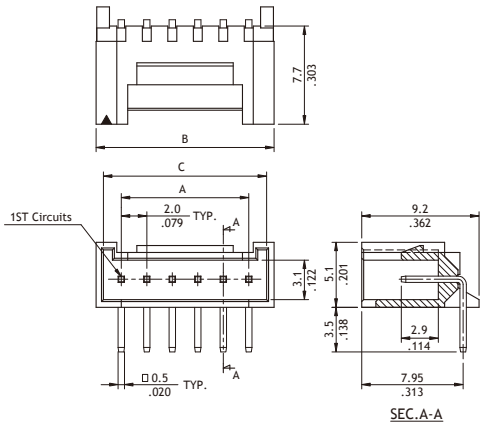

SMT Type

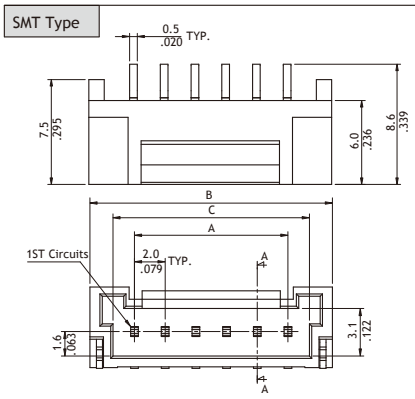

A = 2.0 x No. of Spaces
B = A + 5.8
C = A + 2.8

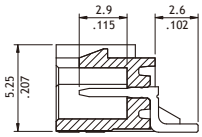

SEC.:A-A

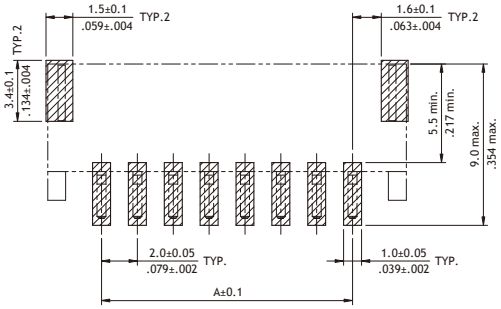

Recommended PCB Layout

Ordering Code

① ② ③ ④ ⑤ ⑥ ⑦
CI06 16 P 1 V 00 - NH

① Series No.
② No. of Circuits: 02 to 16
③ S = Housing
④ Plating Code: 1 = Matte Tin over Nickel
⑤ Type: V = Straight ; H = Right Angle
⑥ Other Options: 00 = Standard
⑦ Process: -LF = For Lead Free soldering process
-NH = For Lead Free soldering process and Halogen-Free
*Special options consult manufacturer

① ② ③ ④ ⑤ ⑥ ⑦ ⑧
CI06 15 M 1 H R 0 - NH

① Series No.
② No. of Circuits: 02 to 15
③ M = SMT Type
④ Plating Code: 1 = Matte Tin over Nickel
⑤ Type: H = Side Entry
⑥ Packing: R = Tape & Reel ; T = Tube
⑦ Other Options: 0 = Standard
⑧ Process: -LF = For Lead Free soldering process
-NH = For Lead Free soldering process and Halogen-Free

CIDJ Series 2.40mm (.094") Wire to Board Connectors SMT Headers

NEW

- ◎ Surface mount terminal strips with connection
- ◎ Direct push-in of solid conductors
- ◎ A total height of only 3.2mm helps minimize shadowing in LED applications
- ◎ Packaged in tape-and-reel for automated SMT processes
- ◎ Wiring ports with balcony design – creates "lead-in" for ease of wiring, even at a slight angle

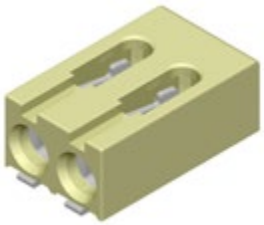

RoHS Compliant HF HF

Circuits	Dimension	
	A	B
1	-	2.5(.098)
2	2.4(.094)	4.9(.193)
3	4.8(.189)	7.3(.287)

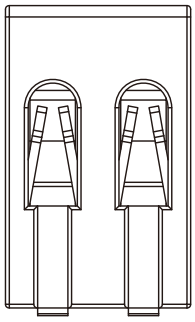

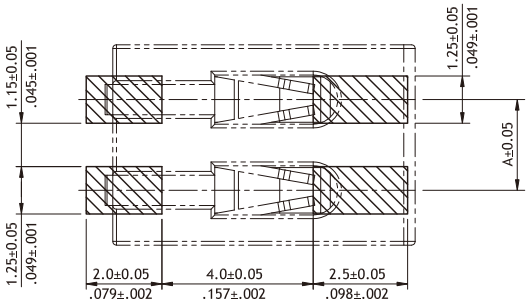

Recommended PCB Layout

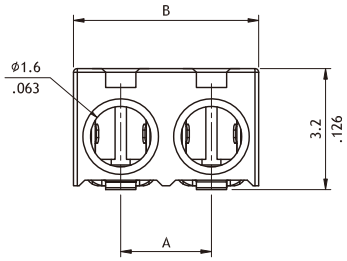

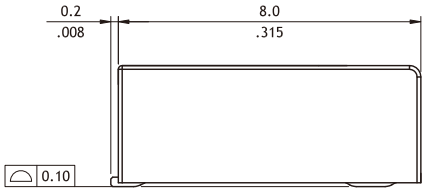

Ordering Code

①	②	③	④	⑤	⑥	⑦		⑧
CIDJ	03	M	1	H	R	0	-	NH

① Series No.
② No. of Circuits: 01 to 03
③ M = SMT Type Header
④ Plating Code:
1 = Matte Tin over Nickel
⑤ Type : H = Side Entry
⑥ Packing option:
R= Tape & Reel
⑦ Other option:
0= Standard
⑧ Process: -NH= For Lead Free IR Process and Halogen-Free

CI21 Series 2.50mm(.098") Wire to Board Connectors Housing & Terminal

- ◎ Low profile with locking ribs
- ◎ Mate with CI21 header
- ◎ Can be used with CI21 crimp clip terminal
- ◎ Insulator: Nylon 66 UL 94V-0 , Color Nature
- ◎ Terminal: Tin plated Phosphor Bronze

RoHS Compliant HF

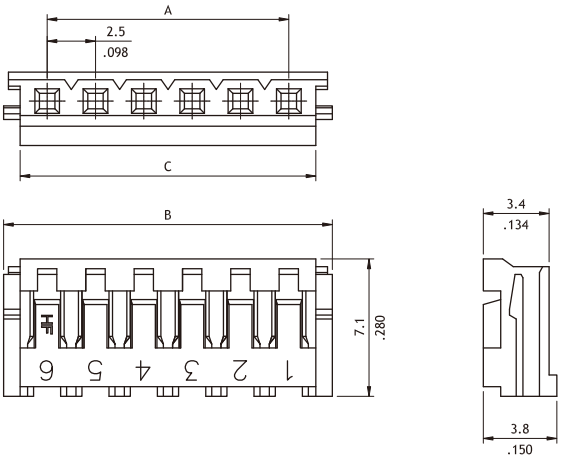

Circuits	Dimension		
	A	B	C
2	2.5(.098)	7.0(.276)	5.4(.213)
3	5.0(.197)	9.5(.374)	7.9(.311)
4	7.5(.295)	12.0(.472)	10.4(.409)
5	10.0(.394)	14.5(.571)	12.9(.508)
6	12.5(.492)	17.0(.669)	15.4(.606)
7	15.0(.591)	19.5(.768)	17.9(.705)
8	17.5(.689)	22.0(.866)	20.4(.803)
9	20.0(.787)	24.5(.965)	22.9(.902)
10	22.5(.886)	27.0(1.063)	25.4(1.000)
11	25.0(.984)	29.5(1.161)	27.9(1.098)
12	27.5(1.083)	32.0(1.260)	30.4(1.197)
13	30.0(1.181)	34.5(1.358)	32.9(1.295)
14	32.5(1.280)	37.0(1.457)	35.4(1.394)
15	35.0(1.378)	39.5(1.555)	37.9(1.492)

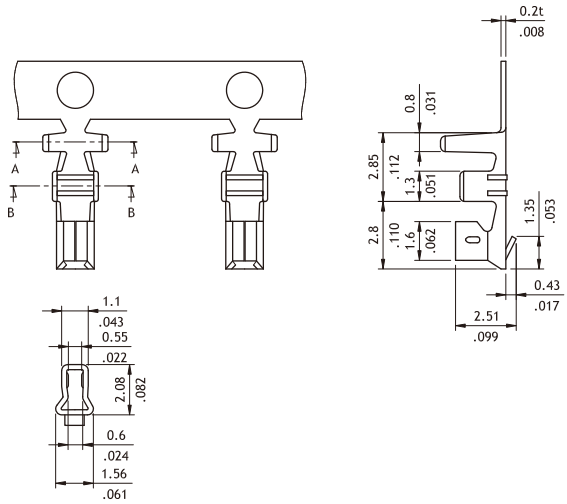

Wire Range	Insulation Diameter	Reel Q'ty
AWG #24~#30	1.9 (.075) MAX.	10,000 PCS.

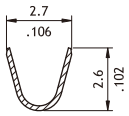

SEC.: A-A

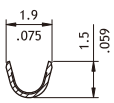

SEC.: B-B

Ordering Code

① ② ③ ④

CI21 15 S 0000

① Series No.
② No. of Circuits: 02 to 15
③ S = Housing
④ Other Options: 0000 = Standard
*Special options consult manufacturer

① ② ③ ④ ⑤

CI21 T02 1 P E0

① Series No.
② Type: T02 = AWG #24 ~ #30
③ Plating Code: 1 = Tin over Nickel
④ Material: P = Phosphor Bronze
⑤ Other Options: E0 = Standard

CI21 Series 2.50mm(.098") Wire to Board Connectors DIP Headers

◎ With locking slots and Pin kinked
◎ Mate with CI21 Housing
◎ Insulator: Polyamide UL 94V-0, Color Nature
◎ With Tin plated 0.64mm square pin

RoHS Compliant

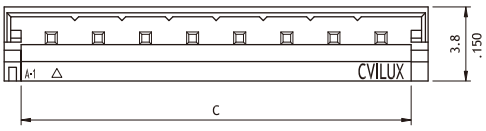

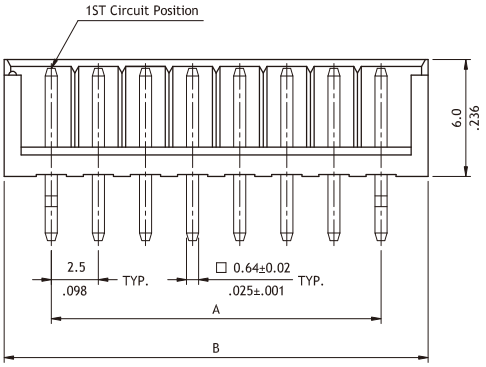

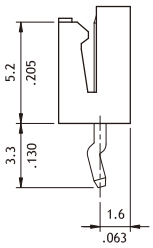

Circuits	Dimension		
	A	B	C
2	2.5(.098)	7.5(.295)	5.7(.224)
3	5.0(.197)	10.0(.394)	8.2(.323)
4	7.5(.295)	12.5(.492)	10.7(.421)
5	10.0(.394)	15.0(.591)	13.2(.520)
6	12.5(.492)	17.5(.689)	15.7(.618)
7	15.0(.591)	20.0(.787)	18.2(.717)
8	17.5(.689)	22.5(.886)	20.7(.815)
9	20.0(.787)	25.0(.984)	23.2(.913)
10	22.5(.886)	27.5(1.083)	25.7(1.012)
11	25.0(.984)	30.0(1.181)	28.2(1.110)
12	27.5(1.083)	32.5(1.280)	30.7(1.209)
13	30.0(1.181)	35.0(1.378)	33.2(1.307)
14	32.5(1.280)	37.5(1.476)	35.7(1.406)
15	35.0(1.378)	40.0(1.575)	38.2(1.504)

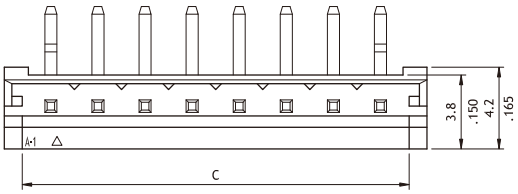

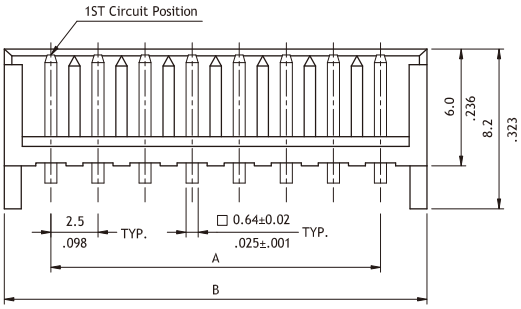

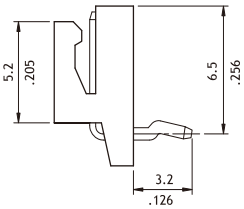

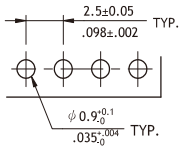

Recommended P.C. Board Layout

Ordering Code

①	②	③	④	⑤	⑥	⑦
CI21	15	P	1	V	K0	-NH

① Series No.
② No. of Circuits: 02 to 15
③ P = DIP Type
④ Plating Code: 1 = Matte Tin over Nickel
⑤ Type: V = Straight
H = Right Angle
⑥ Other Options: 00 = Without Pin Kined
K0 = With Pin Kinked (Standard)
⑦ Process: -LF = For Lead Free soldering process
-NH = For Lead Free soldering process and Halogen-Free
*Special options consult manufacturer

CI22 Series 2.50mm(.098") Wire to Board IDC Connectors Housing & Terminal

- ◎ Low profile with locking ribs
- ◎ Mate with CI22 Header
- ◎ Can be used with CI22 crimp clip terminal
- ◎ Insulator: Nylon 66 UL 94V-0, Color Nature
- ◎ Terminal: Tin plated Brass or Phosphor Bronze

RoHS Compliant

NEW

Crimp Type Housing :

P/N	CI22**S0000

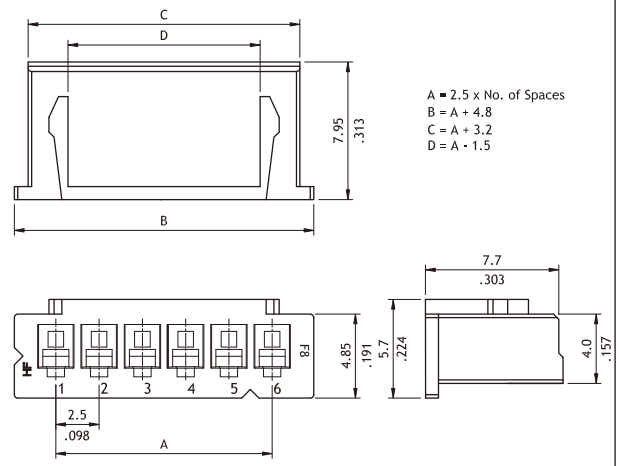

IDC Type Housing :

P/N	CI22**S1000

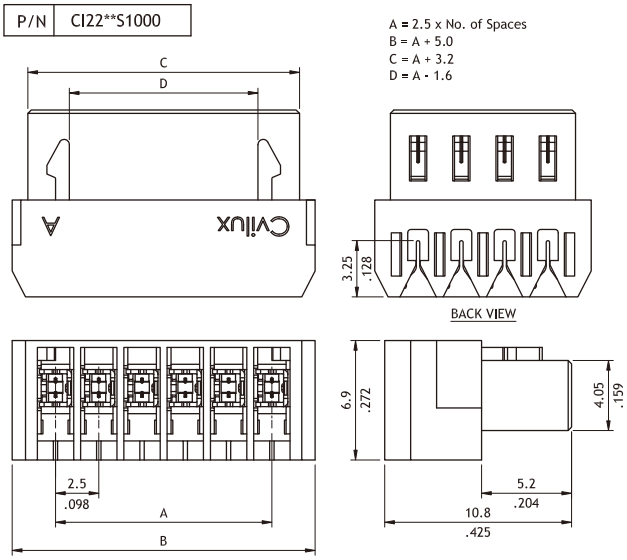

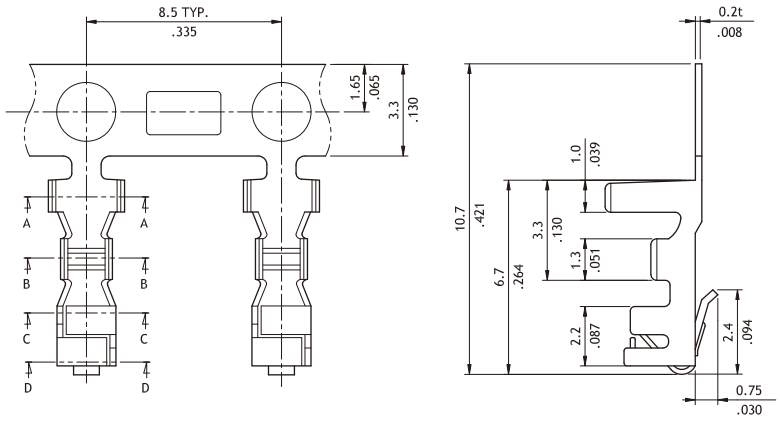

Wire Range	Insulation Diameter	Reel Q'ty
AWG #22-#28	1.60 (.063) MAX.	6,000 PCS.

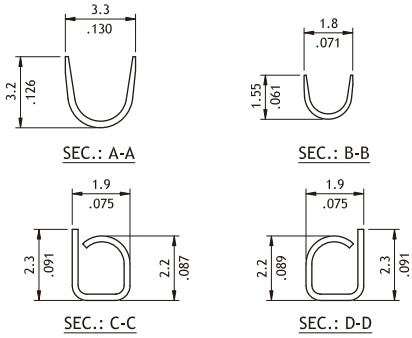

Ordering Code

① ② ③ ④

C I 2 2	1 5	S	0 0 0 0

① Series No.
② No. of Circuits: 02 to 15
③ S = Housing
④ Other Options: 0000 = Standard
*Special options consult manufacturer

① ② ③ ④ ⑤

C I 2 2	1 5	S	2	0 0 0

① Series No.
② No. of Circuits: 02 to 15
③ S = Housing
④ Plating Code:
1 = Matte Tin over Nickel
2 = Gold flash over Nickel
⑤ Other Options: 000 = Standard

CI22 Series 2.50mm(.098") Wire to Board Connectors DIP Headers

◎ With locking slot and Pin Kinked
◎ Mate with CI22 housing
◎ Insulator: Polyamide UL 94V-0 , Color Nature
◎ With Tin plated 0.64mm square pin

RoHS Compliant

Straight

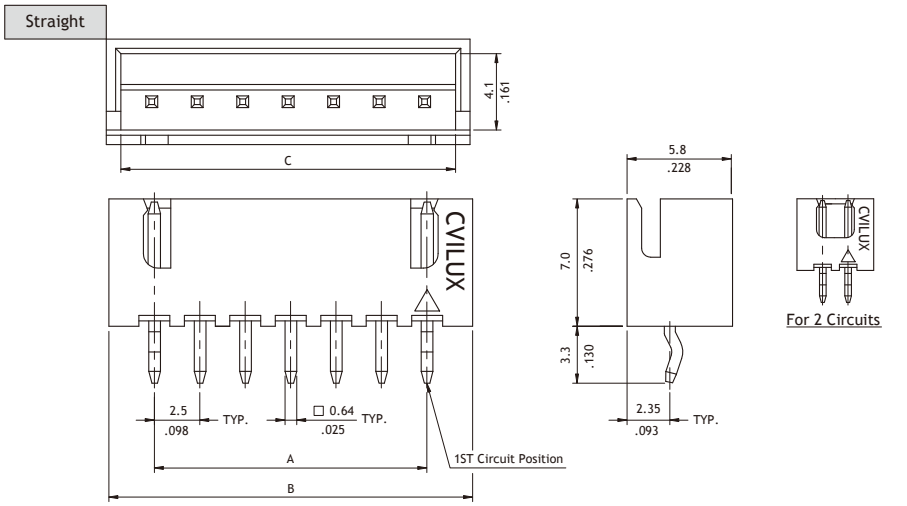

Circuits	Dimension		
	A	B	C
2	2.5(.098)	7.5(.295)	6.0(.236)
3	5.0(.197)	10.0(.394)	8.5(.335)
4	7.5(.295)	12.5(.492)	11.0(.433)
5	10.0(.394)	15.0(.591)	13.5(.531)
6	12.5(.492)	17.5(.689)	16.0(.630)
7	15.0(.591)	20.0(.787)	18.5(.728)
8	17.5(.689)	22.5(.886)	21.0(.827)
9	20.0(.787)	25.0(.984)	23.5(.925)
10	22.5(.886)	27.5(1.083)	26.0(1.024)
11	25.0(.984)	30.0(1.181)	28.5(1.122)
12	27.5(1.083)	32.5(1.280)	31.0(1.220)
13	30.0(1.181)	35.0(1.378)	33.5(1.319)
14	32.5(1.280)	37.5(1.476)	36.0(1.417)
15	35.0(1.378)	40.0(1.575)	38.5(1.516)
16	37.5(1.476)	42.5(1.673)	41.0(1.614)
17	40.0(1.575)	45.0(1.772)	43.5(1.713)
18	42.5(1.673)	47.5(1.870)	46.0(1.811)
19	45.0(1.772)	50.0(1.969)	48.5(1.909)
20	47.5(1.870)	52.5(2.067)	51.0(2.008)

Right Angle

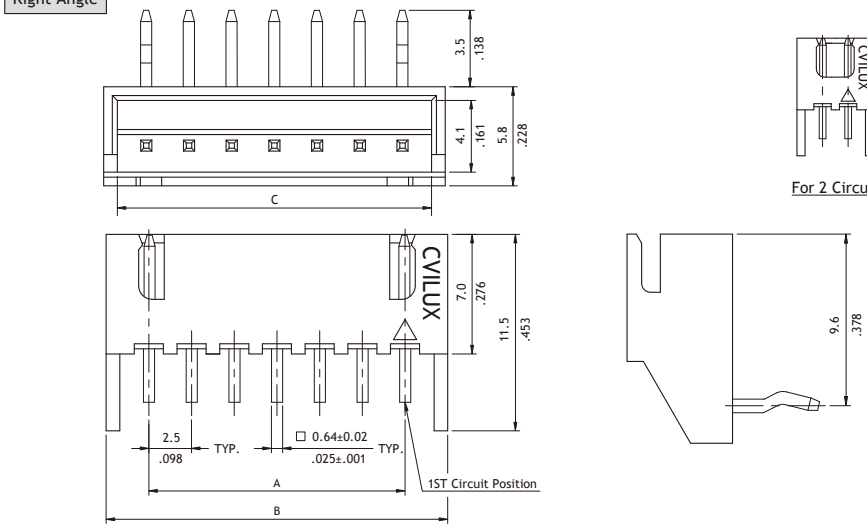

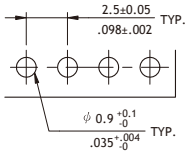

Recommended PCB Layout

Ordering Code

①	②	③	④	⑤	⑥		⑦
CI22	20	P	1	V	K0	-	NH

① Series No.
② No. of Circuits: 02 to 20
③ P = DIP Type
④ Plating Code: 1 = Matte Tin over Nickel
⑤ Type: V = Straight
H = Right Angle

⑥ Other Options:
00 = Without Pin Kinked
K0 = With Pin Kinked (Standard)
⑦ Process: -LF = For Lead Free soldering process
-NH = For Lead Free soldering process and Halogen-Free
*Special options consult manufacturer

CI23 Series 2.50mm(.098") Wire to Board Connectors Housing & Terminal

- ◎ Low profile with locking tab
- ◎ Mate with CI23 header
- ◎ Can be used with CI23 crimp clip terminal
- ◎ Terminal accommodated AWG #22 ~ #28
- ◎ Insulator: Nylon 66 UL 94V-2 , Color Ivory
- ◎ Terminal: Tin plated Phosphor Bronze

RoHS Compliant HF

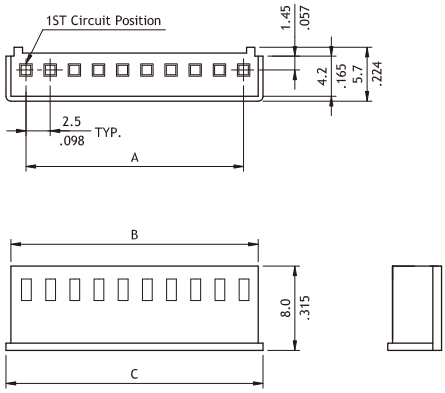

Circuits	Dimension		
	A	B	C
2	2.5(.098)	6.0(.236)	7.2(.283)
3	5.0(.197)	8.5(.335)	9.7(.382)
4	7.5(.295)	11.0(.433)	12.2(.480)
5	10.0(.394)	13.5(.531)	14.7(.579)
6	12.5(.492)	16.0(.630)	17.2(.677)
7	15.0(.591)	18.5(.728)	19.7(.776)
8	17.5(.689)	21.0(.827)	22.2(.874)
9	20.0(.787)	23.5(.925)	24.7(.972)
10	22.5(.886)	26.0(1.024)	27.2(1.071)
11	25.0(.984)	28.5(1.122)	29.7(1.169)
12	27.5(1.083)	31.0(1.220)	32.2(1.268)

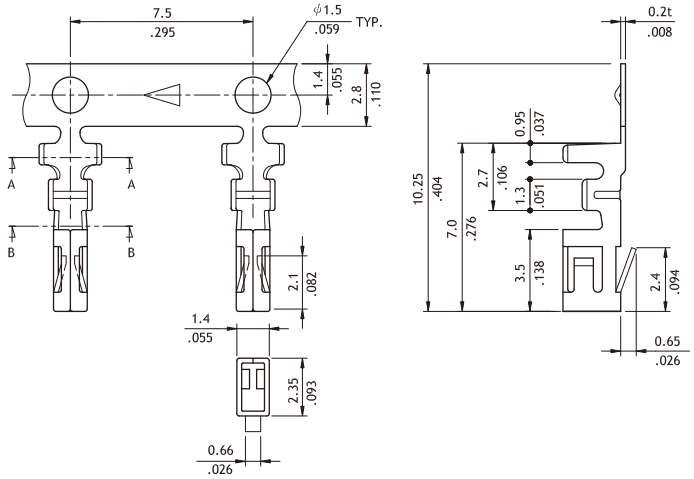

Wire Range	Insulation Diameter	Reel Q'ty
AWG #22~#28	1.9 (.075) MAX.	8,000 PCS

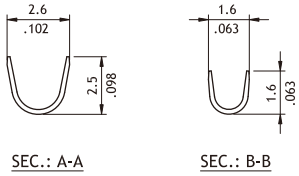

SEC.: A-A SEC.: B-B

Ordering Code

① ② ③ ④

CI23 12 S 0000

① Series No.
② No. of Circuits: 02 to 12
③ S = Housing
④ Other Options: 0000 = Standard
*Special options consult manufacturer

① ② ③ ④ ⑤

CI23 T02 1 P E0

① Series No.
② Type: T02 = AWG #22 ~ #28
③ Plating Code: 1 = Tin over Nickel
④ Material: P = Phosphor Bronze
⑤ Other Options: E0 = Standard

CI23 Series 2.50mm(.098") Wire to Board Connectors DIP Headers

◎ With locking wall
◎ Mate with CI23 Housing
◎ Insulator: Nylon 66 UL 94V-2, Color Ivory
◎ With Tin plated 0.64mm square pin

RoHS Compliant HF

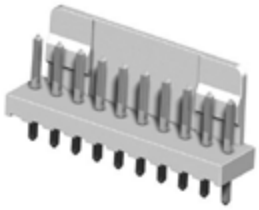

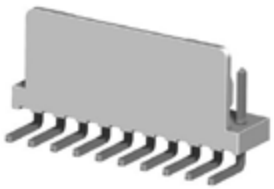

Straight

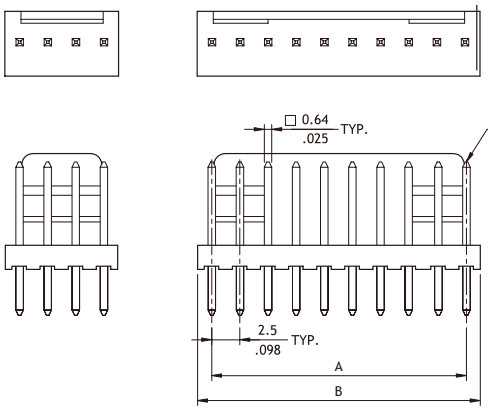

(2 Through 5 Circuits) (6 Through 12 Circuits)

Circuits	Dimension	
	A	B
2	2.5(.098)	5.0(.197)
3	5.0(.197)	7.5(.295)
4	7.5(.295)	10.0(.394)
5	10.0(.394)	12.5(.492)
6	12.5(.492)	15.0(.591)
7	15.0(.591)	17.5(.689)
8	17.5(.689)	20.0(.787)
9	20.0(.787)	22.5(.886)
10	22.5(.886)	25.0(.984)
11	25.0(.984)	27.5(1.083)
12	27.5(1.083)	30.0(1.181)

Right Angle

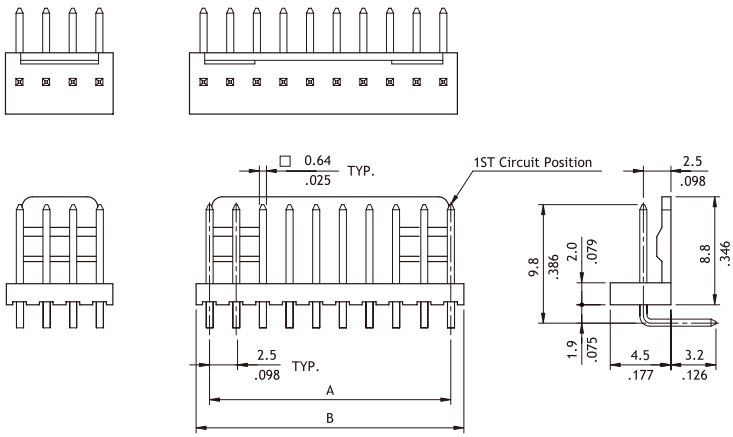

(2 Through 5 Circuits) (6 Through 12 Circuits)

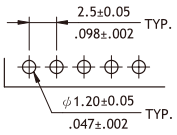

Recommended PCB Layout

Ordering Code

①	②	③	④	⑤	⑥
CI23	12	P	1	V	00

① Series No.
② No. of Circuits: 02 to 12
③ P = DIP Type
④ Plating Code:
1 = Tin over Nickel

⑤ Type: V = Straight
H = Right Angle
⑥ Other Options:
00 = Standard
*Special options consult manufacturer

CI25 Series 2.50mm(.098") Wire to Board Connectors Housing & Terminal

- ◎ Low profile with locking ribs
- ◎ Mate with CI25 header
- ◎ Can be used with CI25 crimp clip terminal
- ◎ Terminal accommodated AWG #22 ~ #28
- ◎ Insulator: Nylon 66 UL 94V-0 , Color Ivory
- ◎ Terminal: Tin plated Phosphor Bronze

RoHS Compliant HF

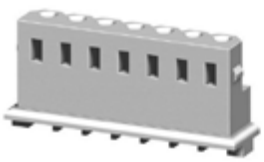

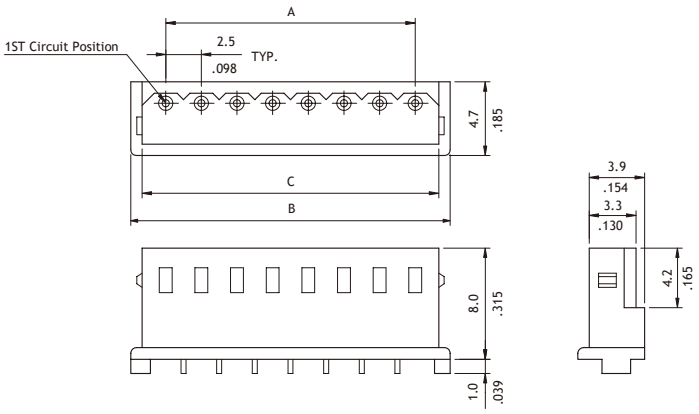

Circuits	Dimension		
	A	B	C
2	2.5(.098)	7.4(.291)	5.8(.228)
3	5.0(.197)	9.9(.390)	8.3(.327)
4	7.5(.295)	12.4(.488)	10.8(.425)
5	10.0(.394)	14.9(.587)	13.3(.524)
6	12.5(.492)	17.4(.685)	15.8(.622)
7	15.0(.591)	19.9(.783)	18.3(.720)
8	17.5(.689)	22.4(.882)	20.8(.819)
9	20.0(.787)	24.9(.980)	23.3(.917)
10	22.5(.886)	27.4(1.079)	25.8(1.016)
11	25.0(.984)	29.9(1.177)	28.3(1.114)
12	27.5(1.083)	32.4(1.276)	30.8(1.213)
13	30.0(1.181)	34.9(1.374)	33.3(1.311)
14	32.5(1.280)	37.4(1.472)	35.8(1.409)
15	35.0(1.378)	39.9(1.571)	38.3(1.508)

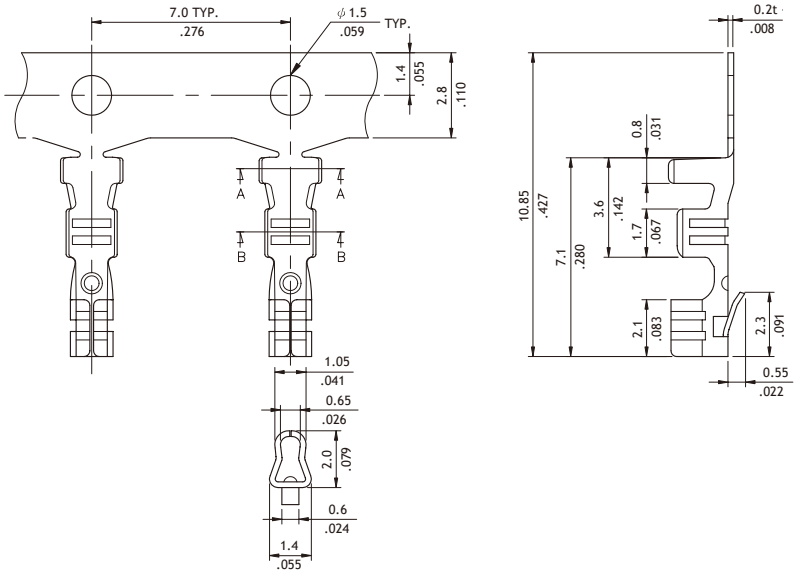

Wire Range	Insulation Diameter	Reel Q'ty
AWG #22~#28	1.6 (.063) MAX.	10,000 PCS.

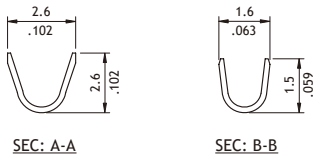

SEC: A-A SEC: B-B

Ordering Code

① ② ③ ④

C I 2 5 | 1 2 | S | 0 0 0 0

① Series No.
② No. of Circuits: 02 to 15
③ S = Housing
④ Other Options: 0000 = Standard
*Special options consult manufacturer

① ② ③ ④ ⑤

C I 2 5 | T 0 2 | 1 | P | E 0

① Series No.
② Type: T02 = AWG #22 ~ #28
③ Plating Code: 1 = Tin over Nickel
④ Material: P = Phosphor Bronze
⑤ Other Options: E0 = Standard

CI25 Series 2.50mm(.098") Wire to Board Connectors DIP Headers

◎ With locking slot
◎ Mate with CI25 housing
◎ Insulator: Polyamide UL 94V-0 , Color Ivory
◎ With Tin plated 0.7mm round pin

RoHS Compliant

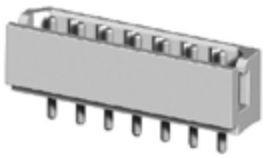

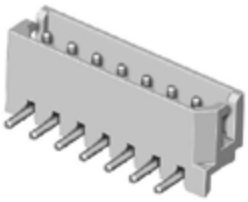

CI25**P1V00-NH

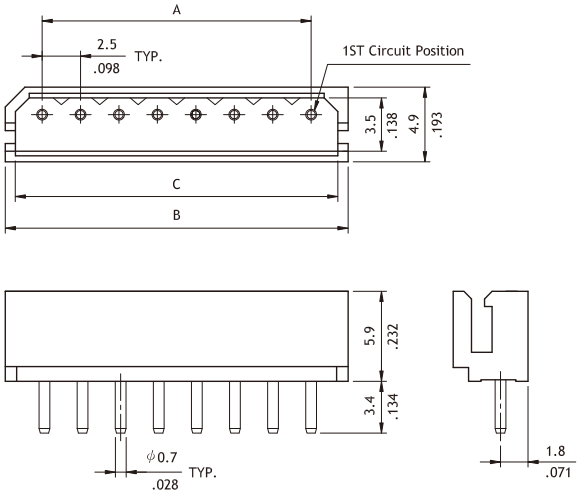

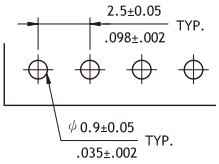

Recommended PCB Layout

A = 2.5 x No. of Spaces
B = A + 5.0
C = A + 3.5

CI25**P1H00-NH

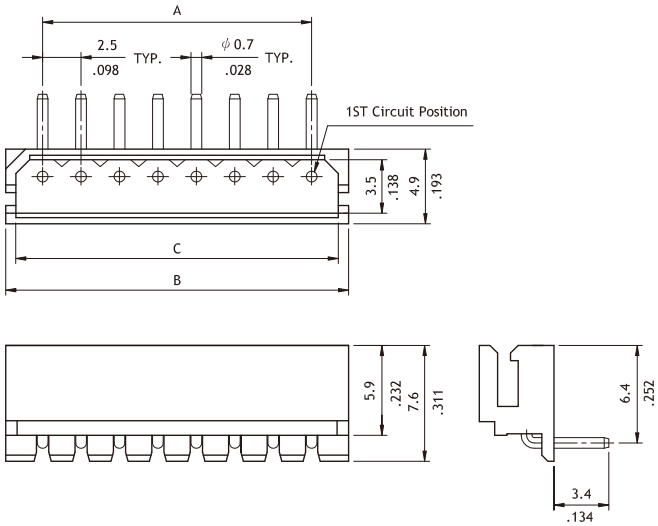

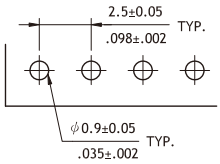

Recommended PCB Layout

A = 2.5 x No. of Spaces
B = A + 5.0
C = A + 3.5

Ordering Code

①	②	③	④	⑤	⑥		⑦
CI25	12	P	1	V	00	-	NH

① Series No.
② No. of Circuits: 02 to 15
③ P = DIP Type
④ Plating Code:
1 = Matte Tin over Nickel
⑤ Type: V = Straight
H = Right Angle

⑥ Other Options:
00 = Standard
*Special options consult manufacturer
⑦ Process: -LF = For Lead Free soldering process
-NH = For Lead Free soldering process and Halogen-Free

CI26 Series 2.50mm(.098") Board In Connectors

- ◎ Low profile with locking ribs
- ◎ Can be used with CI26 Board in terminal
- ◎ Terminal accommodated AWG #22 ~ #26
- ◎ Insulator: Nylon 66 UL 94V-0 , Color Ivory
- ◎ Terminal: Tin plated Phosphor Bronze

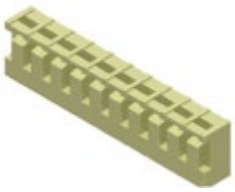

RoHS Compliant HF

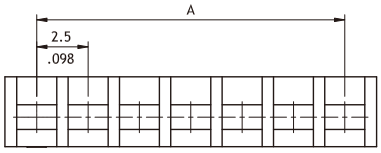

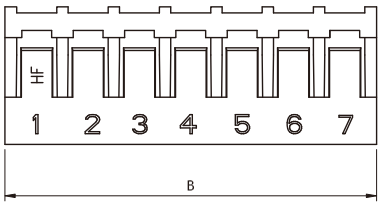

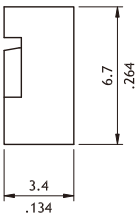

Circuits	Dimension	
	A	B
2	2.5(.098)	5.6(.220)
3	5.0(.197)	8.1(.389)
4	7.5(.295)	10.6(.417)
5	10.0(.394)	13.1(.516)
6	12.5(.492)	15.6(.614)
7	15.0(.591)	18.1(.713)
8	17.5(.689)	20.6(.811)
9	20.0(.787)	23.1(.909)
10	22.5(.886)	25.6(1.008)
11	25.0(.984)	28.1(1.106)
12	27.5(1.083)	30.6(1.205)
13	30.0(1.181)	33.1(1.303)
14	32.5(1.280)	35.6(1.402)
15	35.0(1.378)	38.1(1.598)
16	37.5(1.476)	40.6(1.598)

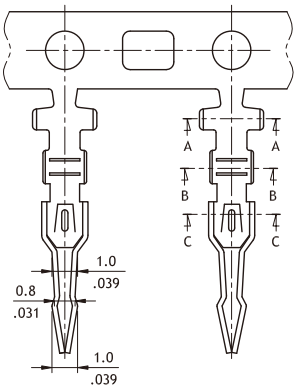

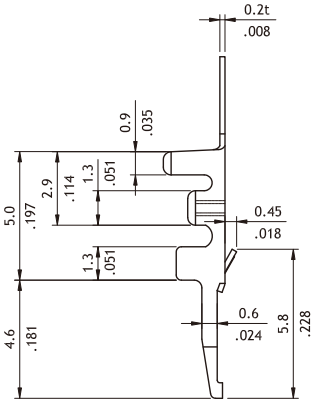

Wire Range	Insulation Diameter	Reel Q'ty
AWG #22-#26	1.6 (.063) MAX.	10,000 PCS

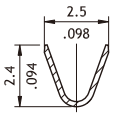

SEC.: A-A

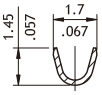

SEC.: B-B

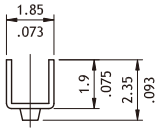

SEC.: C-C

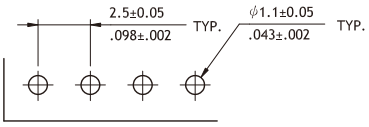

Recommended PCB Layout

Ordering Code

① ② ③ ④

CI26	16	S	0000

① Series No.
② No. of Circuits: 02 to 16
③ S = Housing
④ Other Options: 0000 = Standard
*Special options consult manufacturer

① ② ③ ④ ⑤

CI26	T02	1	P	E0

① Series No.
② Type: T02 = AWG #22 ~ #26
③ Plating Code: 1 = Tin over Nickel
④ Material: P = Phosphor Bronze
⑤ Other Options: E0 = Standard

CI27 Series 2.50mm(.098") Board In Connectors

- ◎ Low profile with locking ribs
- ◎ Can be used with CI27 Crimp Board in Terminal
- ◎ Terminal accommodated AWG #22 ~ #26
- ◎ Insulator: Nylon 66 UL 94V-0, Color Nature
- ◎ Terminal: Tin plated Phosphor Bronze

RoHS Compliant HF

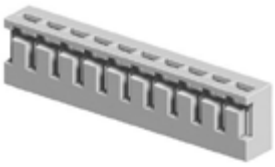

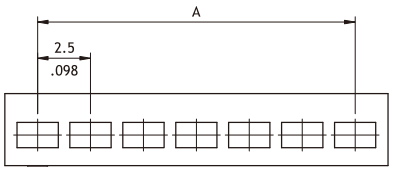

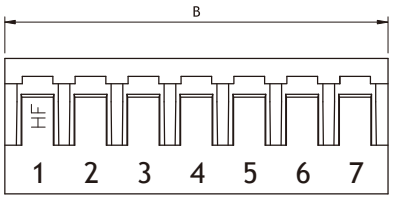

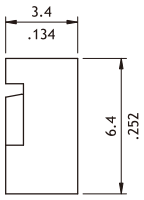

Circuits	Dimension	
	A	B
2	2.5(.098)	5.7(.224)
3	5.0(.197)	8.2(.323)
4	7.5(.295)	10.7(.421)
5	10.0(.394)	13.2(.520)
6	12.5(.492)	15.7(.618)
7	15.0(.591)	18.2(.717)
8	17.5(.689)	20.7(.815)
9	20.0(.787)	23.2(.913)
10	22.5(.886)	25.7(1.012)
11	25.0(.984)	28.2(1.110)
12	27.5(1.083)	30.7(1.209)
13	30.0(1.181)	33.2(1.307)
14	32.5(1.280)	35.7(1.406)
15	35.0(1.378)	38.2(1.504)
16	37.5(1.476)	40.6(1.598)

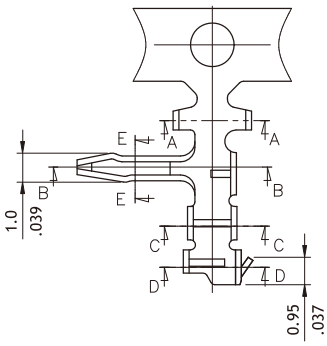

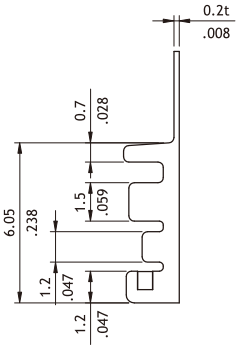

Wire Range	Insulation Diameter	Reel Q'ty
AWG #22~#26	1.6 (.063) MAX.	7,000 PCS

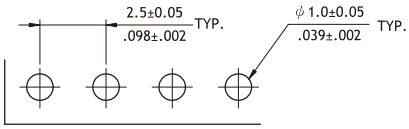

Recommended PCB Layout

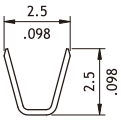

SEC.: A-A

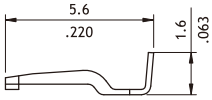

SEC.: B-B

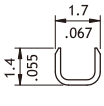

SEC.: C-C

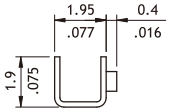

SEC.: D-D

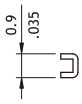

SEC.: E-E

Ordering Code

① ② ③ ④

CI27	16	S	0000

① Series No.
② No. of Circuits: 02 to 16
③ S = Housing
④ Other Options: 0000 = Standard
*Special options consult manufacturer

① ② ③ ④ ⑤

CI27	T02	1	P	EH

① Series No.
② Type: T02 = AWG #22 ~ #26
③ Plating Code: 1 = Tin over Nickel
④ Material: P = Phosphor Bronze
⑤ Other Options: EH = Right Angle Terminal

CI91 Series 2.50mm(.098") Straight Wire Holder Connectors

- ◎ Low cost
- ◎ With retaining PCB pegs
- ◎ Insulator: Nylon 66 UL 94V-0, Color Nature
- ◎ Accommodated AWG #24 ~ #26 cables

RoHS Compliant HF

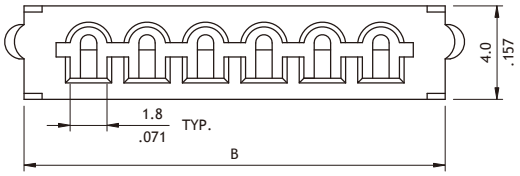

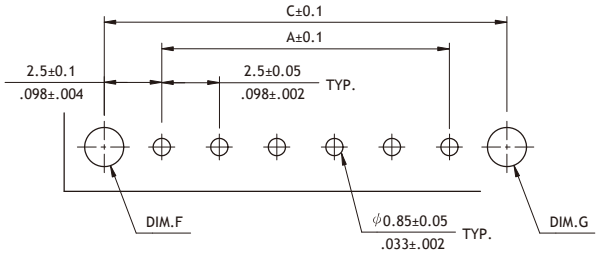

Recommended PCB Layout

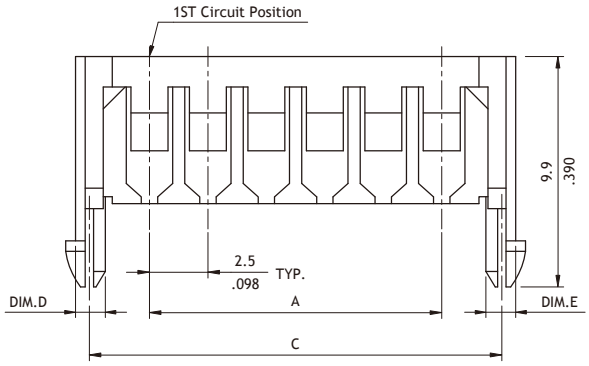

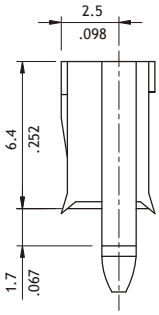

A = 2.5 * No. of Spaces
B = A + 5.3
C = A + 5.0

ACCOMMODATED WIRE SIZE: AWG#24~#26
Stripped Flat Cable
P/N: CI91**SA00*

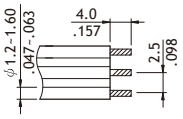

Ordering Code

①	②	③	④
CI91	06	SA	000

① Series No.
② No. of Circuits: 03 , 06
③ Connector Style:
SA = For Stripped Flat Cable

④ Other Options:
000 : Dimension D = 1.60,
E = 1.60,
F = 1.75,
G = 1.75

CI30 Series 2.50mm (.098") Wire to Board Connectors DIP Header

◎ With locking wall
◎ Insulation: Nylon 66 UL 94V-0 , Color Nature

RoHS Compliant

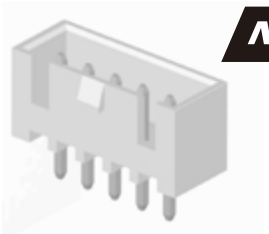

NEW

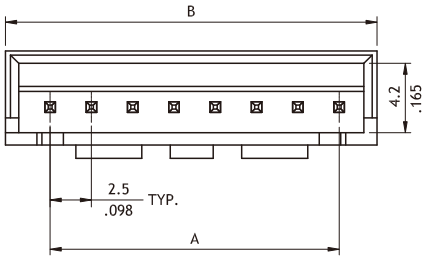

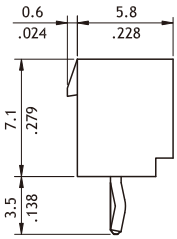

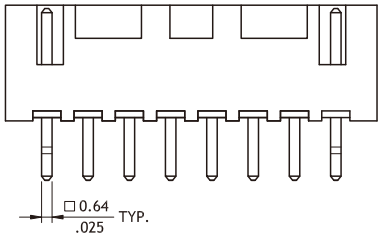

6~20P

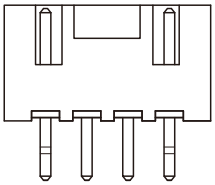

2~5P

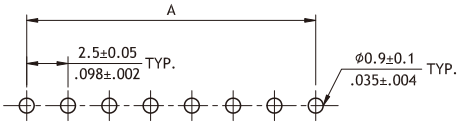

Recommended PCB Layout

A = 2.50 x No. of Spaces
B = A + 5.0

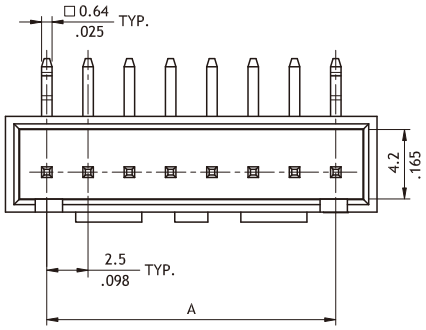

6~15P

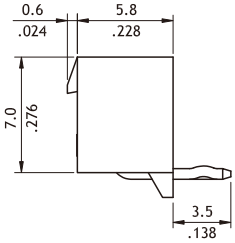

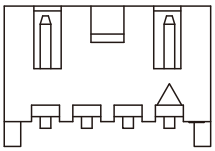

2~5P

Ordering Code

①	②	③	④	⑤	⑥
CI30	02	P	1	V	K0

① Series No.
② No. of Circuits: V: 2~20 Circuits ; H: 2~15 Circuits
③ P= DIP Header
④ Plating Code:
1 = Tin over Nickel
⑤ Contact Type : V= Straight
H= Right Angle
⑥ Option : K0 = Standard

CI60 Series 2.50mm (.098") Wire to Board Connectors DIP Header

◎ With locking wall
◎ Insulation: Nylon 66 UL 94V-0 , Color Nature

RoHS Compliant

NEW

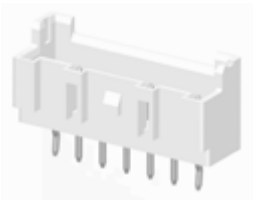

Part No.	Wire Range	Insulation Diameter	Reel Q'ty	Material
CI60T021PE0	AWG #22~#28	1.90 (.075) MAX.	8,000 PCS	Phosphor Bronze

P/N	CI60**SL000

A = 2.5 x No. of Spaces
B = A + 4.8
C = A + 3.1

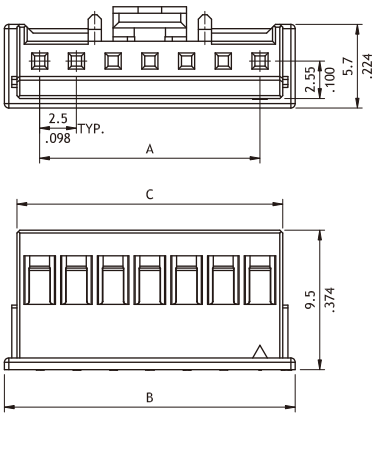

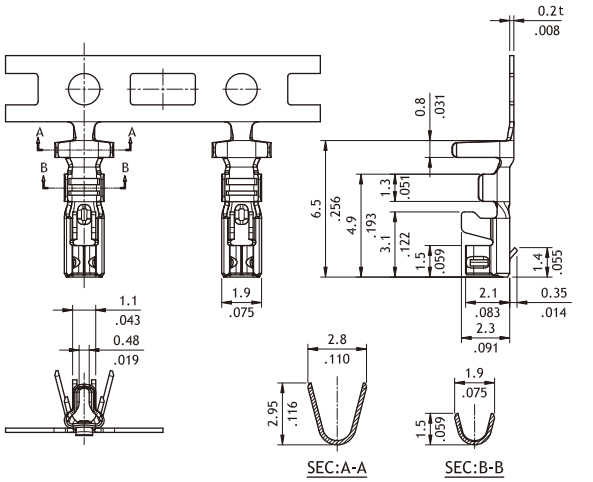

P/N	CI60**P1VK0

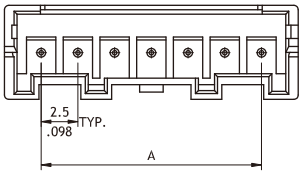

A = 2.5 x No. of Spaces
B = A + 5.0

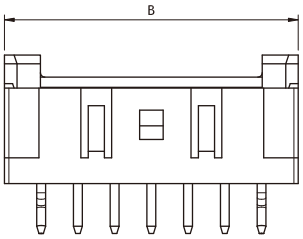

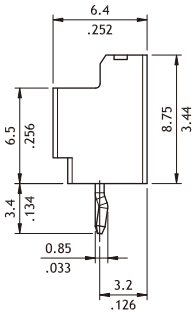

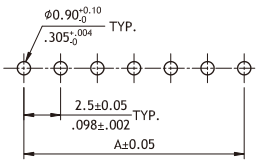

Recommended PCB Layout

Ordering Code

① ② ③ ④ ⑤
CI60 15 S L 000

① Series No.
② No. of Circuits: 02 to 15
③ S = Housing
④ L=With Locking Latch
⑤ Option: 000=Standard (Color Nature)

① ② ③ ④ ⑤ ⑥
CI60 15 P 1 V K0

① Series No.
② No. of Circuits: 02 to 15
③ P = Pin Header
④ Plating : 1= Tin over Nickel
⑤ Type : V= Straight Type
⑥ Other Option: K0= With Pin Kinked

CIL4 Series 2.5mm(.098") Wire to Board Connectors SMT Headers

◎ With PAD for SMT Line pick and place machine

RoHS Compliant Pb HF

NEW

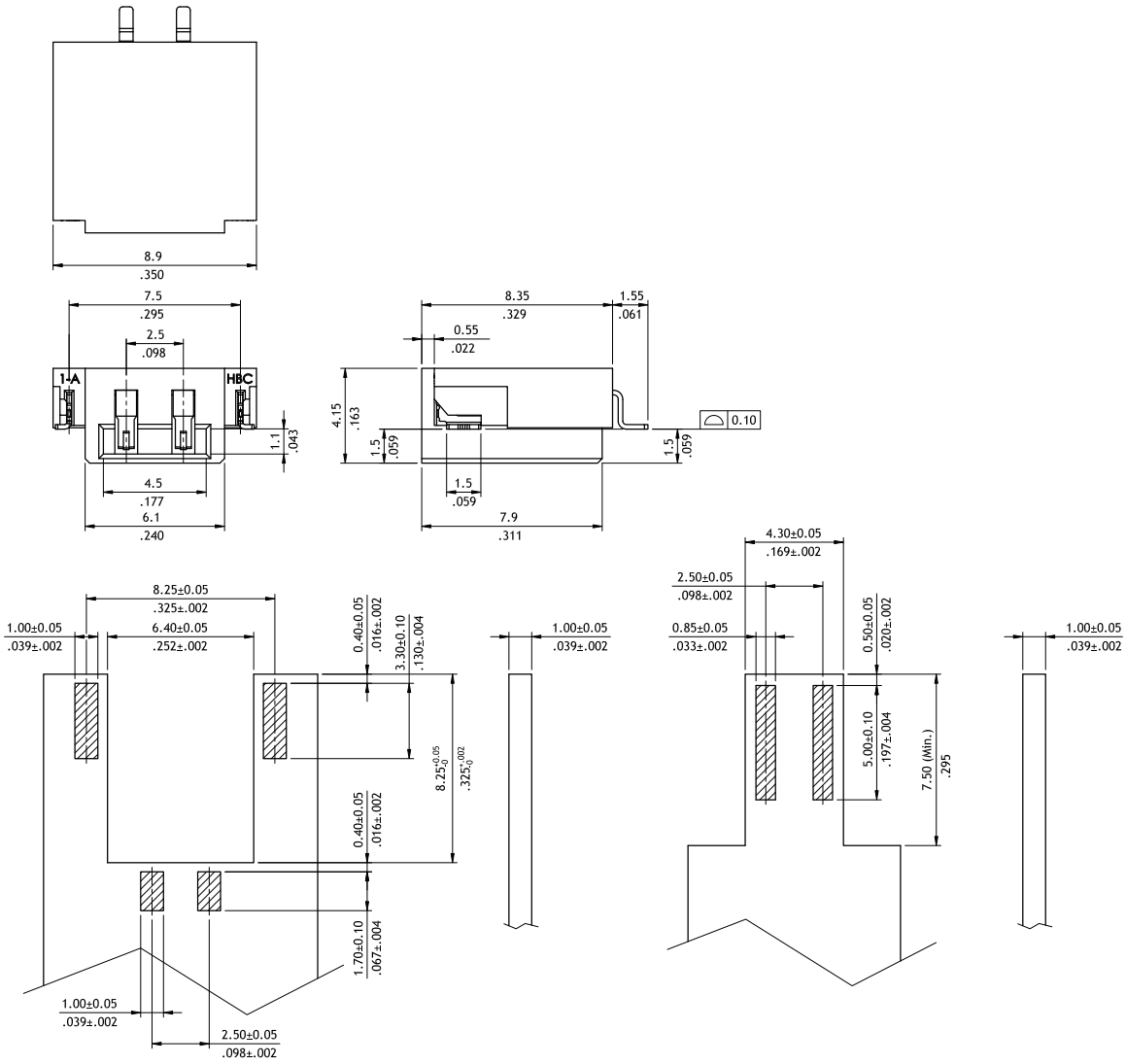

Recommended Connector PCB Layout

Recommended Light Bar PCB Layout

Ordering Code

①	②	③	④	⑤	⑥	⑦	⑧
CIL4	02	M	1	H	R	0	- NH

① Series No.
② No. of Circuits: 02
③ M = SMT Type
④ Plating Code:
1 = Matte Tin over Nickel

⑤ Type: H = Side Entry
⑥ Packing Options:
R=Tape & Reel
⑦ Options:
0 = Standard
⑧ Process:
-NH = For Lead Free IR process and Halogen-Free

CID2 Series 2.54mm(.100") IDC Type Connectors

◎ Terminal: Tin-plated Phosphor Bronze
◎ Housing: UL 94V-2 Nylon 66
◎ With or without locking ramp and polarizing tabs
◎ Feed-Thru and Closed End type
◎ Wire range AWG #22 ~ #28 (Flat ribbon wire)
◎ Mate with CI31 Headers

RoHS Compliant

Closed End type
Without Polarizing Tabs

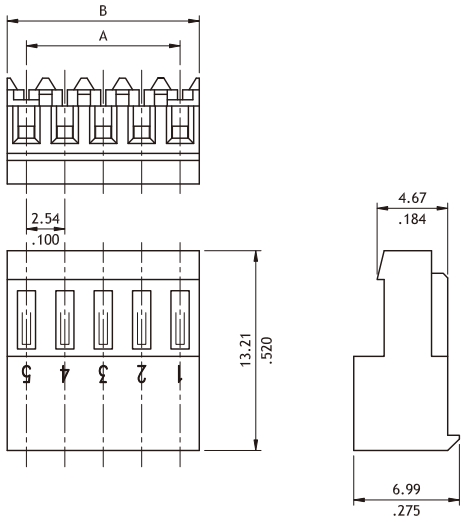

Closed End type
With Polarizing Tabs

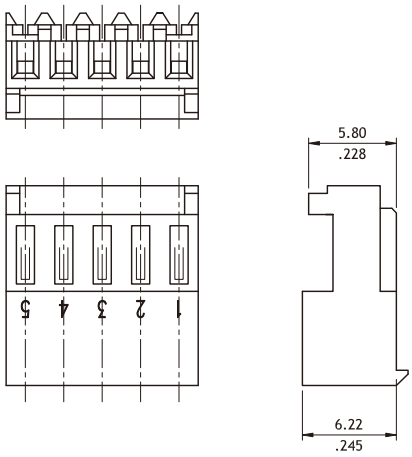

Feed-Thru type
With Polarizing Tabs

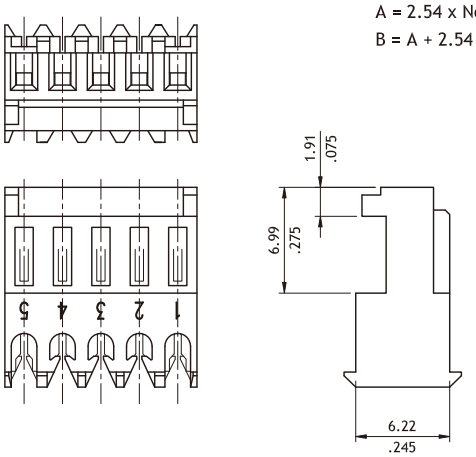

A = 2.54 x No. of Spaces
B = A + 2.54

Feed-Thru type
Without Polarizing Tabs

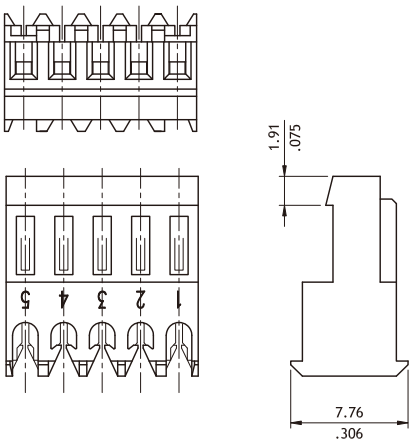

Ordering Code

①	②	③	④	⑤	⑥	⑦
CID2	24	S	1	A	0	0

① Series No.
② No. of Circuits: 02 to 24
③ S = Housing
④ Plating Code: 1 = Tin plated over Nickel
⑤ Type: A = Closed End Type
B = Feed-Thru Type

⑥ Color Options:
0 = Color white, for AWG #24
3 = Color red, for AWG #22
6 = Color green, for AWG #28
7 = Color blue, for AWG #26

⑦ Other Options: 0 = W/0 Polarizing Tabs
P = With Polarizing Tabs

CI88 Series 2.54mm(.100") Pin Headers

◎ With locking wall
◎ Insulation: Nylon 66 UL 94V-0, Color Nature

RoHS Compliant

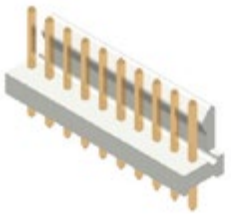

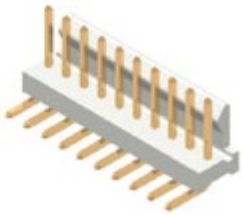

Straight

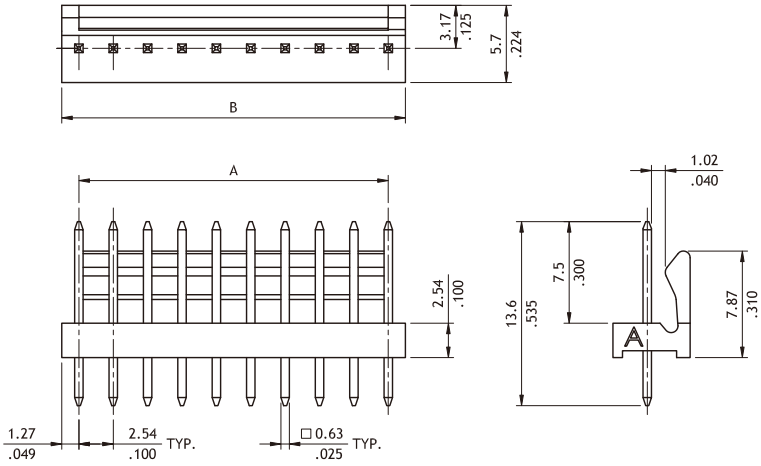

Right Angle

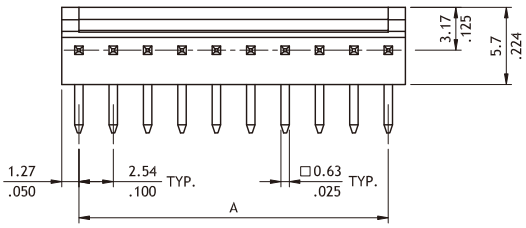

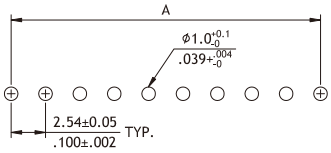

Recommended PCB Layout

A = 2.54 x No. of Spaces
B = A + 2.54

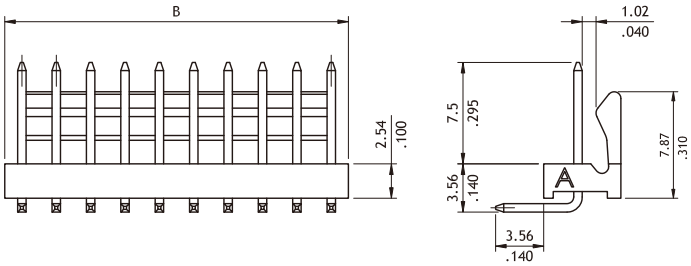

Ordering Code

①	②	③	④	⑤	⑥	⑦
CI88	28	P	1	V	00	-NH

① Series No.
② No. of Circuits: 02 to 28
③ P = DIP Header
④ Plating Code:
1 = Matte Tin over Nickel
2 = Gold flash plated over Nickel

⑤ Type: V = Straight
H = Right Angle
⑥ Other Options: 00 = Standard
⑦ Process: -NH = For Lead Free soldering process and Halogen-Free

CI31 Series 2.54mm(.100") Wire to Board Connectors Housing & Terminal

- ◎ With locking ramps and ribs
- ◎ Mate with CI31, CH31, CI83 header
- ◎ Can be used with CI31 crimp clip terminal
- ◎ Insulator: Nylon 66 UL 94V-2, Color Ivory
- ◎ Terminal: Tin plated Brass or Phosphor Bronze

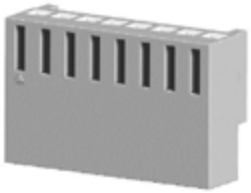

RoHS Compliant HF

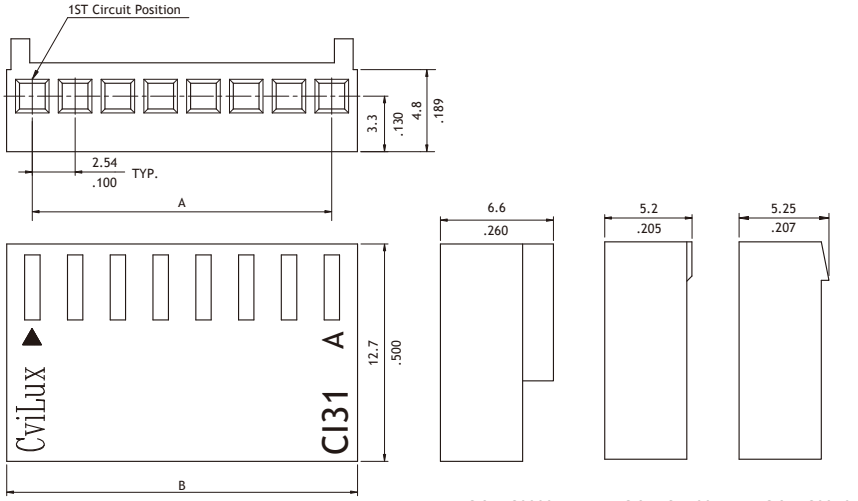

Circuits	Dimension	
	A	B
2	2.54(.100)	5.6(.220)
3	5.08(.200)	8.1(.319)
4	7.62(.300)	10.7(.421)
5	10.16(.400)	13.2(.520)
6	12.70(.500)	15.8(.622)
7	15.24(.600)	18.3(.720)
8	17.78(.700)	20.8(.819)
9	20.32(.800)	23.4(.921)
10	22.86(.900)	25.9(1.020)
11	25.40(1.000)	28.5(1.122)
12	27.94(1.100)	31.0(1.220)
13	30.48(1.200)	33.5(1.319)
14	33.02(1.300)	36.1(1.421)
15	35.56(1.400)	38.6(.1.520)
16	38.10(1.500)	41.2(1.622)
17	40.64(1.600)	43.7(1.720)
18	43.18(1.700)	46.2(1.819)
19	45.72(1.800)	48.8(1.921)
20	48.26(1.900)	51.3(2.020)

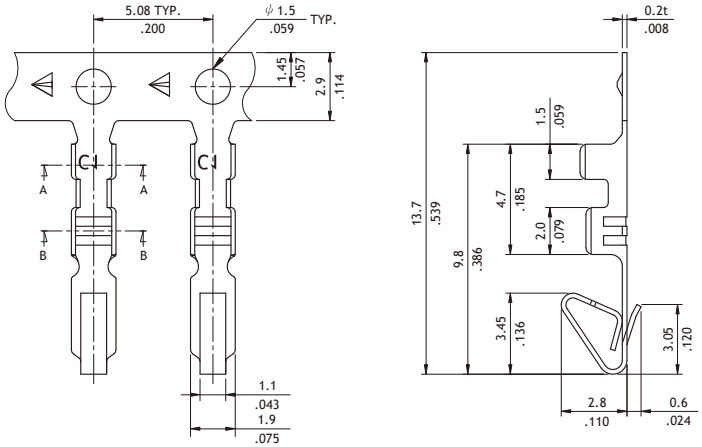

Wire Range	Insulation Diameter	Reel Q'ty
AWG #22-#28	1.5 (.059) MAX.	10,000 PCS.

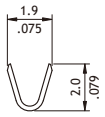

SEC: A-A

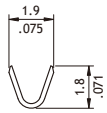

SEC: B-B

Ordering Code

① ② ③ ④

C I 3 1 | 2 0 | S | 0 0 0 0

① Series No.
② No. of Circuits: 02 to 20
③ S = Housing
④ Other Options:
0000 = With Polarizing Ribs (Long)
00R0 = With Polarizing Ribs (Short)
NP00 = Without Polarizing Rib
*Special options consult manufacturer

① ② ③ ④ ⑤

C I 3 1 | T 0 2 | 1 | B | E 0

① Series No.
② Type: T02 = AWG #22 ~ #28
③ Plating Code: 1 = Tin over Nickel
④ Material: B = Brass
P = Phosphor Bronze
⑤ Other Options: E0 = Standard

CI31 Series 2.54mm(.100") Wire to Board Connectors DIP Headers

◎ With locking ramps and ribs
◎ Mate with CI31 Housing
◎ Insulator: High temperature plastic UL 94V-0, Color Nature
◎ Terminal: MatteTin plated Brass

RoHS Compliant HF

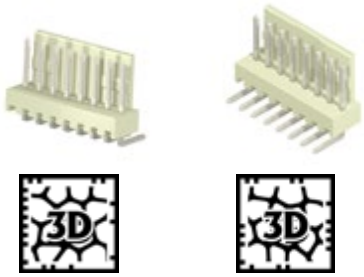

P/N	CI31**P1V0L-NH

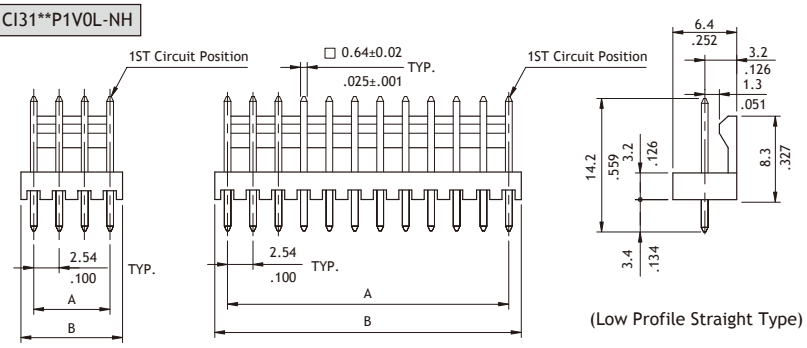

(2 through 5 circuits) (6 through 20 circuits) (Low Profile Straight Type)

P/N	CI31**P1V00-NH

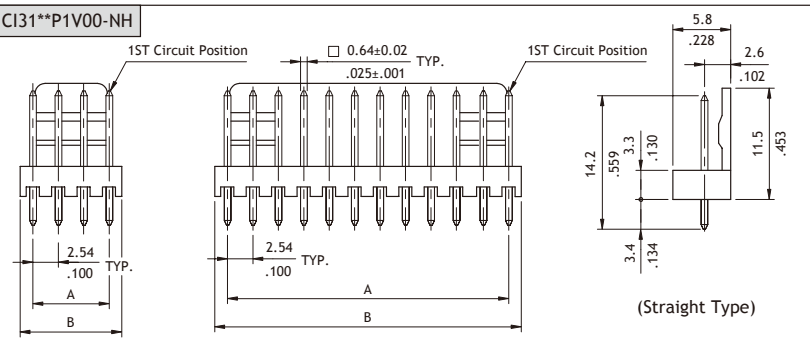

(2 through 5 circuits) (6 through 20 circuits) (Straight Type)

P/N	CI31**P1H00-NH

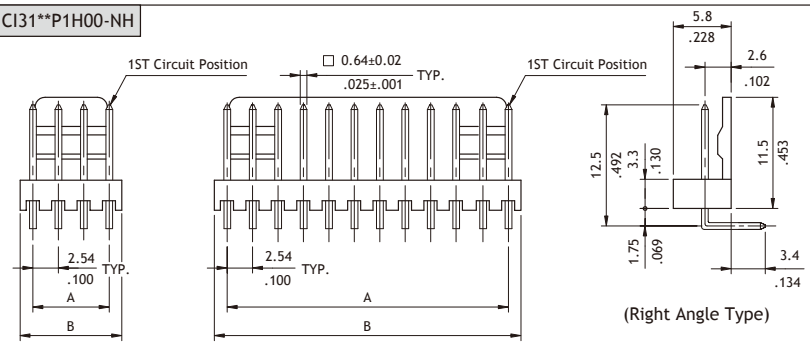

(2 through 5 circuits) (6 through 20 circuits) (Right Angle Type)

P/N	CI31**P1Y00-NH

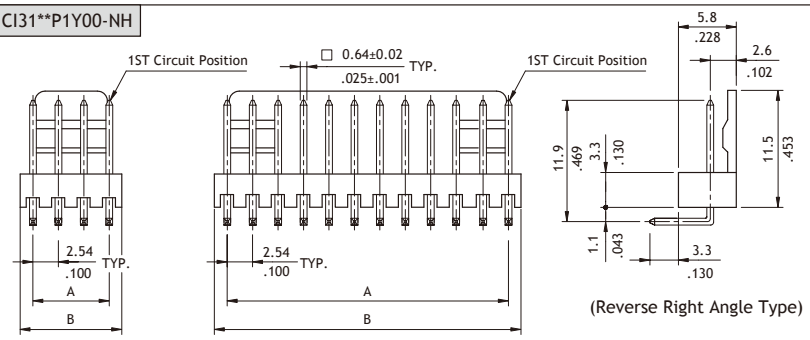

(2 through 5 circuits) (6 through 20 circuits) (Reverse Right Angle Type)

Circuits	Dimension	
	A	B
2	2.54(.100)	5.1(.201)
3	5.08(.200)	7.6(.299)
4	7.62(.300)	10.2(.402)
5	10.16(.400)	12.7(.500)
6	12.70(.500)	15.2(.598)
7	15.24(.600)	17.8(.701)
8	17.78(.700)	20.3(.799)
9	20.32(.800)	22.9(.902)
10	22.86(.900)	25.4(1.000)
11	25.40(1.000)	27.9(1.098)
12	27.94(1.100)	30.5(1.201)
13	30.48(1.200)	33.0(1.299)
14	33.02(1.300)	35.6(1.402)
15	35.56(1.400)	38.1(1.500)
16	38.10(1.500)	40.6(1.598)
17	40.64(1.600)	43.2(1.701)
18	43.18(1.700)	45.7(1.799)
19	45.72(1.800)	48.3(1.902)
20	48.26(1.900)	50.8(2.000)

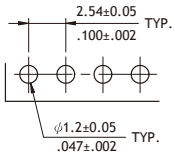

Recommended P.C. Board Layout

CI32 Series 2.54mm(.100") Wire to Board Connectors Housing & Terminal

◎ Mate with CH31, CH34 Header
◎ Can be used with CI32 crimp clip terminal
◎ Insulator: Nylon 66 UL 94V-1, Color Black
◎ Terminal: Tin or Gold flash plated Brass or Phosphor Bronze

RoHS Compliant

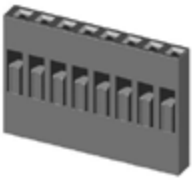

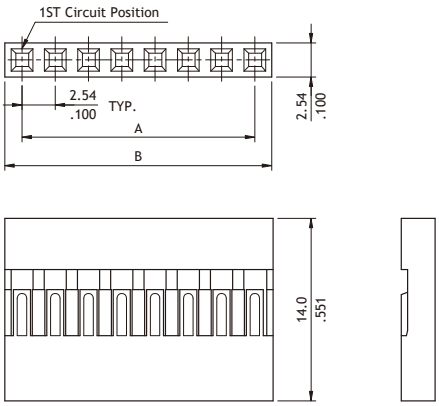

Circuits	Dimension		Circuits	Dimension	
	A	B		A	B
1	-----	2.8(.110)	21	50.80(2.000)	53.6(2.110)
2	2.54(.100)	5.3(.209)	22	53.34(2.100)	56.2(2.213)
3	5.08(.200)	7.8(.307)	23	55.88(2.200)	58.7(2.311)
4	7.62(.300)	10.4(.410)	24	58.42(2.300)	61.3(2.413)
5	10.16(.400)	12.9(.508)	25	60.96(2.400)	63.8(2.512)
6	12.70(.500)	15.4(.606)	26	63.50(2.500)	66.3(2.610)
7	15.24(.600)	18.0(.709)	27	66.04(2.600)	68.9(2.713)
8	17.78(.700)	20.5(.807)	28	68.58(2.700)	71.4(2.811)
9	20.32(.800)	23.1(.909)	29	71.12(2.800)	74.0(2.913)
10	22.86(.900)	25.6(1.008)	30	73.66(2.900)	76.5(3.012)
11	25.40(1.000)	28.1(1.106)	31	76.20(3.000)	79.0(3.110)
12	27.94(1.100)	30.7(1.209)	32	78.74(3.100)	81.6(3.213)
13	30.48(1.200)	33.2(1.307)	33	81.28(3.200)	84.1(3.311)
14	33.02(1.300)	35.8(1.409)	34	83.82(3.300)	86.7(3.413)
15	35.56(1.400)	38.3(1.508)	35	86.36(3.400)	89.2(3.512)
16	38.10(1.500)	40.8(1.606)	36	88.90(3.500)	91.7(3.610)
17	40.64(1.600)	43.4(1.709)	37	91.44(3.600)	94.3(3.713)
18	43.18(1.700)	45.9(1.807)	38	93.98(3.700)	96.8(3.811)
19	45.72(1.800)	48.5(1.909)	39	96.52(3.800)	99.4(3.913)
20	48.26(1.900)	51.1(2.012)	40	99.06(3.900)	101.9(4.012)

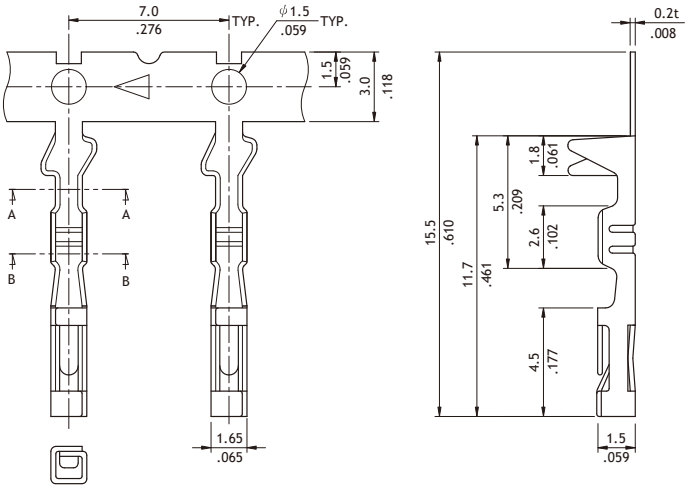

Wire Range	Insulation Diameter	Reel Q'ty
AWG #22~#28	1.7 (.067) MAX.	10,000 PCS

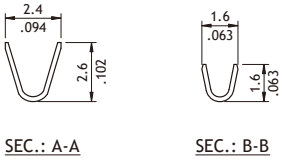

Ordering Code

① ② ③ ④
CI32 40 S 0010

① Series No.
② No. of Circuits: 01 to 40
③ S = Housing
④ Other Options:
0010 = Color Black
*Special options consult manufacturer

① ② ③ ④ ⑤
CI32 T02 A B E0

① Series No.
② Type: T02 = AWG #22 ~ #28
③ Plating Code: 1 = Tin over Nickel
A = Selective Gold flash over Nickel
④ Material: B = Brass ; P =Phosphor Bronze
⑤ Other Options:E0 = Standard

CI34 Series 2.54mm(.100") Dual Row Wire to Board Connectors Housing

◎ With polarizing rib
◎ Mate with CH81, CH84, and CH87 Header
◎ Can be used with CI32 crimp clip terminal
◎ Insulator: Nylon 66 UL 94V-1, Color Black

RoHS Compliant

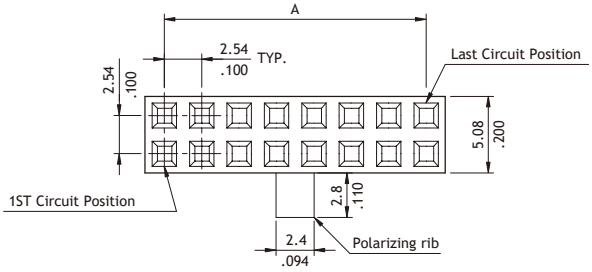

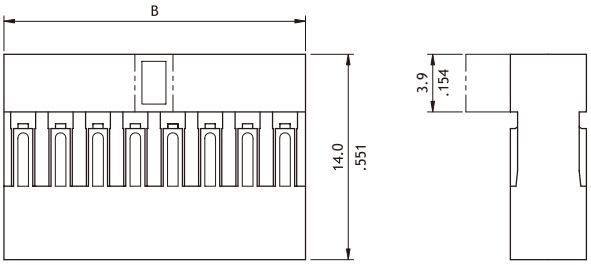

Circuits	Dimension	
	A	B
4	2.54(.100)	5.1(.201)
6	5.08(.200)	7.6(.299)
8	7.62(.300)	10.2(.402)
10	10.16(.400)	12.7(.500)
12	12.70(.500)	15.2(.598)
14	15.24(.600)	17.8(.701)
16	17.78(.700)	20.3(.799)
18	20.32(.800)	22.9(.902)
20	22.86(.900)	25.4(1.000)
22	25.40(1.000)	27.9(1.098)
24	27.94(1.100)	30.5(1.201)
26	30.48(1.200)	33.0(1.299)
28	33.02(1.300)	35.6(1.402)
30	35.56(1.400)	38.1(1.500)
32	38.10(1.500)	40.6(1.598)
34	40.64(1.600)	43.2(1.701)
36	43.18(1.700)	45.7(1.799)
38	45.72(1.800)	48.3(1.902)
40	48.26(1.900)	50.8(2.000)

Ordering Code

①	②	③	④
C I 3 4	4 0	S	0 0 1 0

① Series No.
② No. of Circuits: 04 to 40
③ S = Housing

④ Other Options:
0010 = Color Black, Without Polarizing Rib
001A = Color Black, With Polarizing Rib
*Special options consult manufacturer

CI33 Series 2.54mm(.100") Single Row Wire to Board Connectors Housing

◎ With positive locking ribs and latch
◎ Mate with CI33 Headers
◎ Can be used with CI33 crimp clip terminal
◎ Insulator: Glass filled polyester UL 94V-0, Color Black

RoHS Compliant

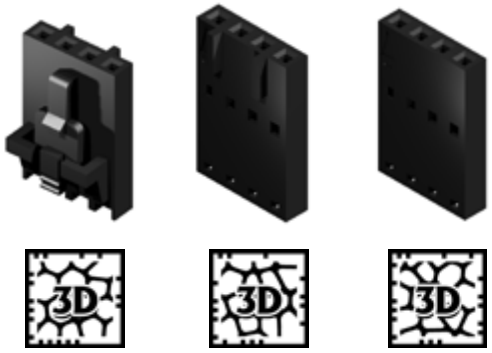

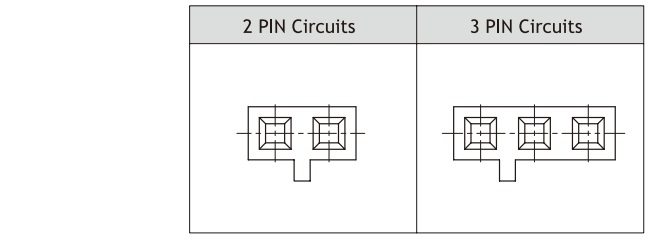

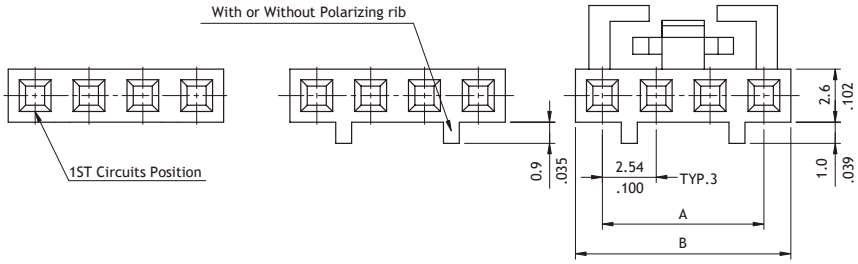

Circuits	Dimension	
	A	B
2	2.54(.100)	5.2(.205)
3	5.08(.200)	7.7(.303)
4	7.62(.300)	10.3(.406)
5	10.16(.400)	12.8(.504)
6	12.70(.500)	15.2(.598)
7	15.24(.600)	17.9(.705)
8	17.78(.700)	20.4(.803)
9	20.32(.800)	23.0(.906)
10	22.86(.900)	25.5(1.004)
11	25.40(1.000)	28.0(1.102)
12	27.94(1.100)	30.6(1.205)
13	30.48(1.200)	33.1(1.303)
14	33.02(1.300)	35.7(1.406)
15	35.56(1.400)	38.2(1.504)
16	38.10(1.500)	40.7(1.602)
17	40.64(1.600)	43.3(1.705)
18	43.18(1.700)	45.8(1.803)

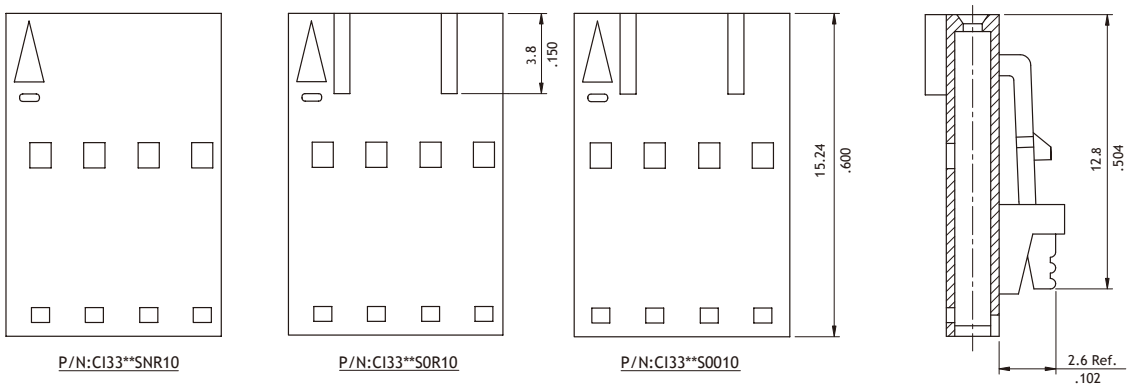

Ordering Code

① ② ③ ④

CI33 18 S00 10

① Series No.
② No. of Circuits: 02 to 18
③ Type:
S00 = With latch and locking ribs
S0R = With polarizing ribs housing
SNR = Without latch and locking rib
④ Other Options
10 = Color Black (Standard)

CI33 Series 2.54mm(.100") Single Row Wire to Board DIP Headers

◎ Box type with locking slot
◎ Mate with CI33 Single Row Housing
◎ Insulator: Glass filled polyester UL 94V-0, Color Black
◎ With Tin plated 0.64mm square pin

RoHS Compliant

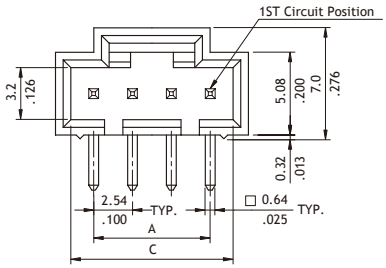

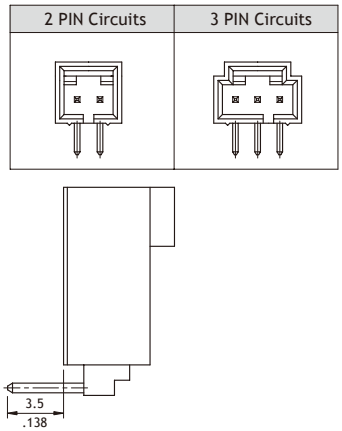

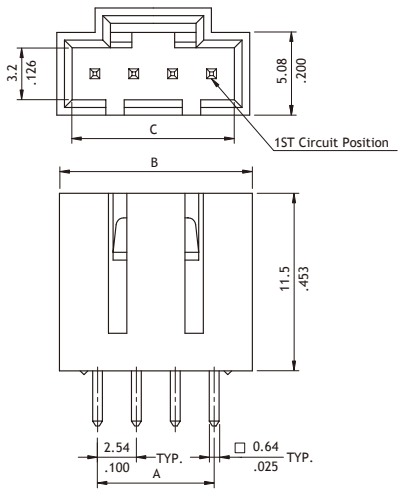

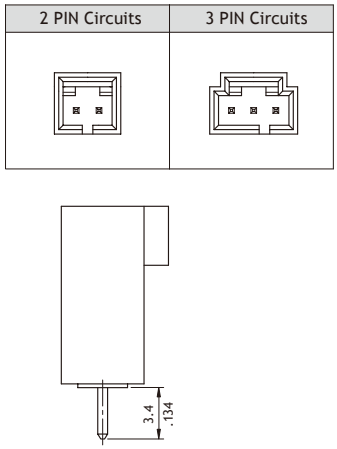

Circuits	Dimension		
	A	B	C
2	2.54(.100)	7.6(.299)	5.52(.217)
3	5.08(.200)	10.2(.402)	8.06(.317)
4	7.62(.300)	12.7(.500)	10.6(.417)
5	10.16(.400)	15.3(.602)	13.14(.517)
6	12.7(.500)	17.8(.701)	15.68(.617)
7	15.24(.600)	20.3(.799)	18.22(.717)
8	17.78(.700)	22.9(.902)	20.76(.817)
9	20.32(.800)	25.4(1.000)	23.3(.917)
10	22.86(.900)	28.0(1.102)	25.84(1.017)
11	25.4(1.000)	30.5(1.201)	28.38(1.117)
12	27.94(1.100)	33.0(1.299)	30.92(1.217)
13	30.48(1.200)	35.6(1.402)	33.46(1.317)
14	33.02(1.300)	38.1(1.500)	36.0(1.417)
15	35.56(1.400)	40.7(1.602)	38.54(1.517)
16	38.1(1.500)	43.2(1.701)	41.08(1.617)
17	40.64(1.600)	45.7(1.799)	43.62(1.717)
18	43.18(1.700)	48.3(1.902)	46.16(1.817)

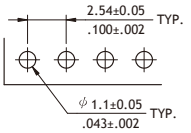

Recommended PCB Layout

Ordering Code

①	②	③	④	⑤	⑥
CI33	18	P	1	V	10

① Series No.
② No. of Circuits: 02 to 18
③ P = DIP Header
④ Plating Code:
1 = Tin over Nickel
2 = Gold flash over Nickel

⑤ Type: V = Straight
H = Right Angle
⑥ Other Options:
10 = Color Black (Standard)
*Special options consult manufacturer

CI33 Series 2.54mm(.100") Dual Row Wire to Board Connectors

◎ With positive locking latch
◎ Mate with CH81, CH84, and CH87 Header
◎ Can be used with CI33 crimp clip terminal
◎ Insulator: Glass filled polyester UL 94V-0, Color Black
◎ With Tin plated Phospohor Bronze

RoHS Compliant

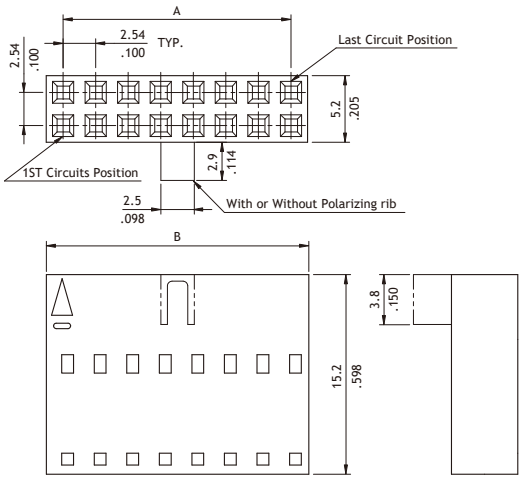

Circuits	Dimension		Circuits	Dimension	
	A	B		A	B
4	2.54(.100)	5.2(.205)	34	40.64(1.600)	43.3(1.705)
6	5.08(.200)	7.7(.303)	36	43.18(1.700)	45.9(1.807)
8	7.62(.300)	10.3(.406)	38	45.72(1.800)	48.4(1.906)
10	10.16(.400)	12.8(.504)	40	48.26(1.900)	50.9(2.004)
12	12.7(.500)	15.4(.606)	42	50.8(2.000)	53.5(2.106)
14	15.24(.600)	17.9(.705)	44	53.34(2.100)	56.0(2.205)
16	17.78(.700)	20.5(.807)	46	55.88(2.200)	58.6(2.307)
18	20.32(.800)	23.0(.906)	48	58.42(2.300)	61.1(2.406)
20	22.86(.900)	25.5(1.004)	50	60.96(2.400)	63.6(2.504)
22	25.4(1.000)	28.1(1.106)	52	63.5(2.500)	66.2(2.606)
24	27.94(1.100)	30.6(1.205)	54	66.04(2.600)	68.7(2.705)
26	30.48(1.200)	33.2(1.307)	56	68.58(2.700)	71.3(2.807)
28	33.02(1.300)	35.7(1.406)	58	71.12(2.800)	73.8(2.906)
30	35.56(1.400)	38.2(1.504)	60	73.66(2.900)	76.3(3.006)
32	38.1(1.500)	40.8(1.606)			

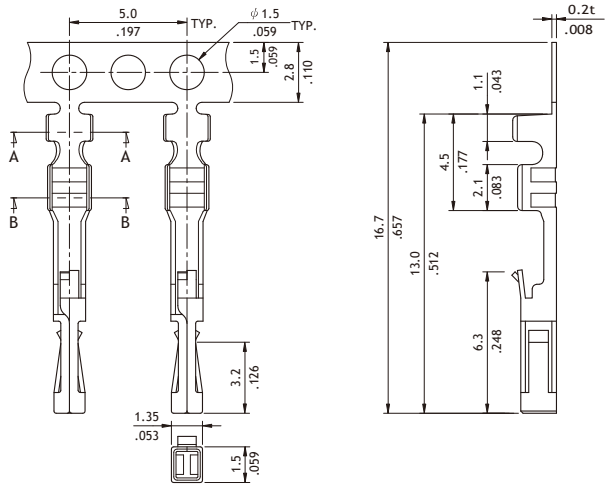

Wire Range	Insulation Diameter	Reel Q'ty
AWG #22-#28	1.7 (.067) MAX.	15,000 PCS.

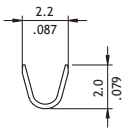

SEC.: A-A

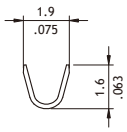

SEC.: B-B

Ordering Code

① ② ③ ④

C I 3 3 | 6 0 | S | 0 D 1 0

① Series No.
② No. of Circuits: 04 to 60
③ S = Housing
④ Other Options:
0D10 = Without Polarizing Rib
0D1A = With Polarizing Rib
*Special options consult manufacturer

① ② ③ ④ ⑤

C I 3 3 | T 0 2 | 1 | P | E 0

① Series No.
② Type: T02 = AWG #22 ~ #28
③ Plating Code: 1 = Tin over Nickel
④ Material: P = Phosphor Bronze
⑤ Other Options: E0 = Standard

CI35 Series 2.54mm(.100") Wire to Board Connectors

- ◎ Housing with locking Ribs
- ◎ Header with locking wall
- ◎ Can be used with CI35 crimp clip terminal
- ◎ Insulator: Nylon 66 UL 94V-0, Color Nature
- ◎ With Tin plated 0.64mm square pin
- ◎ Terminal: Tin plated Brass, Phosphor Bronze

RoHS Compliant

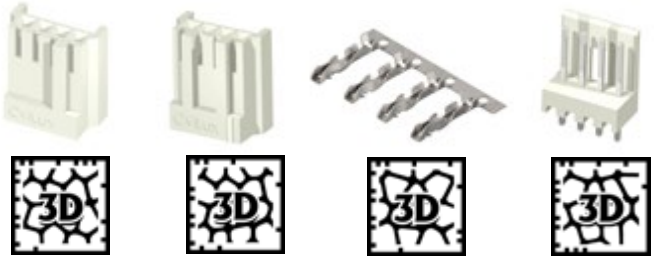

P/N CI3504S0000

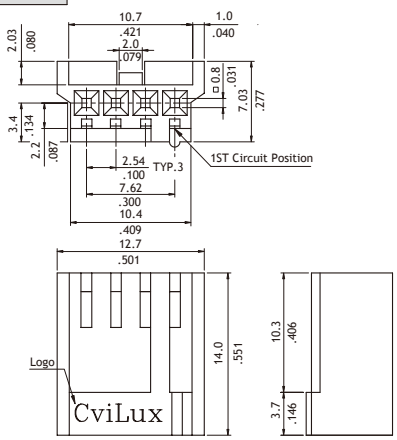

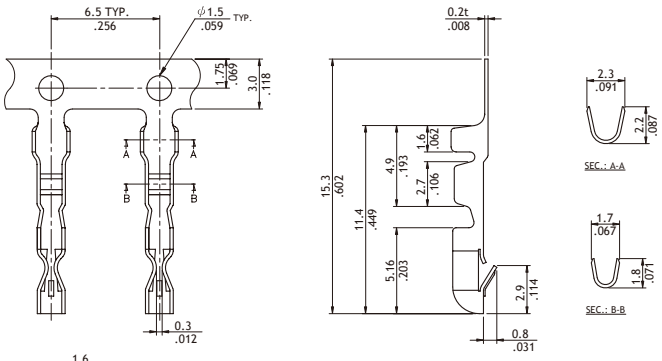

Part No.	Wire Range	Insulation Diameter	Reel Q'ty	Material
CI35T021BE0	AWG #22-#28	1.7 (.067) MAX.	10,000 PCS	Brass
CI35T021PE0	AWG #22-#28	1.7 (.067) MAX.	10,000 PCS	Phosphor Bronze

P/N CI3504SN000

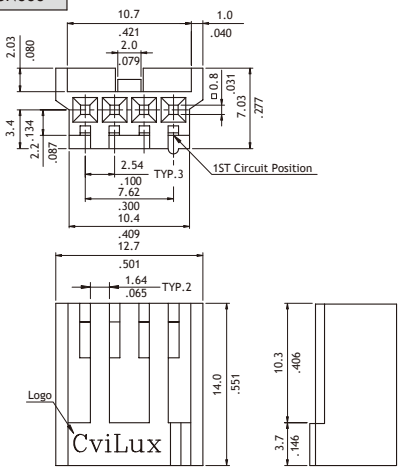

P/N CI3504P1*00

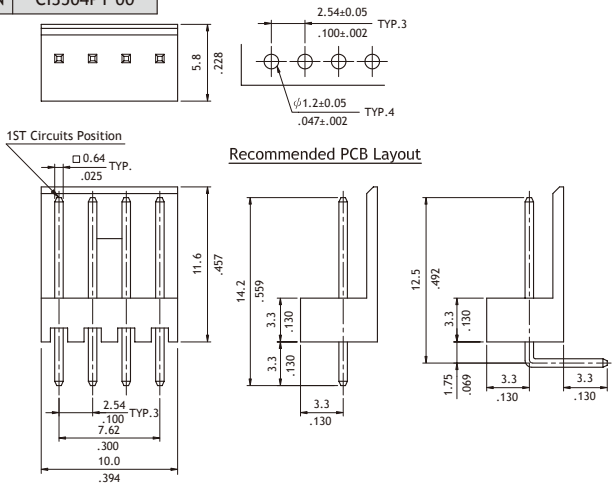

Ordering Code

① ② ③ ④

C I 3 5 | 0 4 | S | 0 0 0 0

① Series No.
② No. of Circuits: 04
③ S = Housing
④ Other Options:
0000 = Single Rib (Standard)
N000 = Dual Ribs
*Special options consult manufacturer

① ② ③ ④ ⑤ ⑥

C I 3 5 | 0 4 | P | 1 | V | 0 0

① Series No.
② No. of Circuits: 04
③ P = Pin Header
④ Plating Code: 1 = Tin over Nickel
⑤ Type: V = Straight ; H = Right Angle
⑥ Other Options: 00 = Standard
*Special options consult manufacturer

CI39 Series 2.54mm(.100") Wire to Board Connectors SMT Headers

◎ Locking wall provide secure mating
◎ With PAD for SMT Line pick and place machine
◎ Insulator: High temperature plastic UL 94V-0, Color Nature
◎ With Tin plated SMT type contact

RoHS Compliant

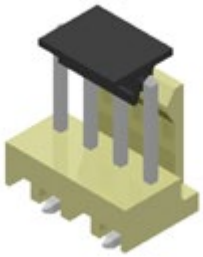

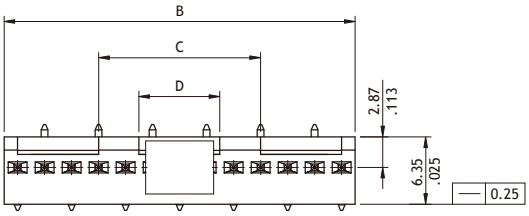

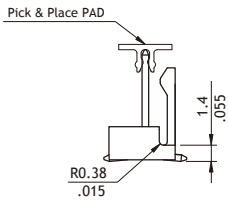

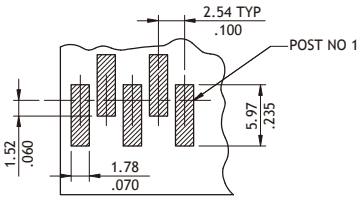

Recommended PCB Layout

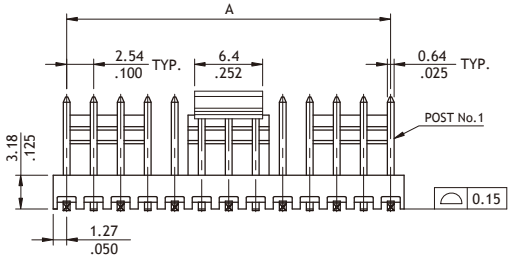

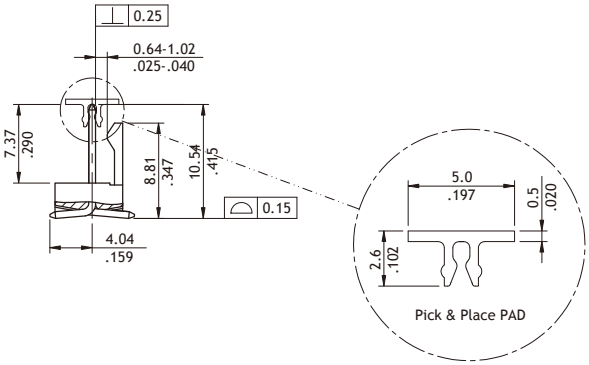

A = 2.54 x No. of Spaces
B = A + 2.54
C = A - 15.24 (Only for 8~18P)

Circuit	DIM. D
2~11P	-
12~13P	7.62(.300)
14~18P	12.70(.500)

Ordering Code

①	②	③	④	⑤	⑥	⑦	⑧
CI39	04	M	1	V	R	0	- NH

① Series No.
② No. of Circuits: 02 to 18
(Available: 03, 04)
③ M = SMT Type
④ Plating Code:
1 = Matte Tin over Nickel
⑤ Type: V = Straight
⑥ Packing Options:
R = Tape & Reel
⑦ Other Options:
0 = Standard
⑧ Process: -NH = For Lead Free IR process and Halogen-Free

CI83 Series 2.54mm(.100") Friction Lock Breakaway Headers

◎ Options with straight and right angle tails
◎ Available with flat back wall for polarization
◎ Mate with most of 2.54mm pitch connector in the marke
◎ Insulator: Glass filled polyester UL 94V-0, Color White
◎ With Tin plated 0.64mm square pin

RoHS Compliant

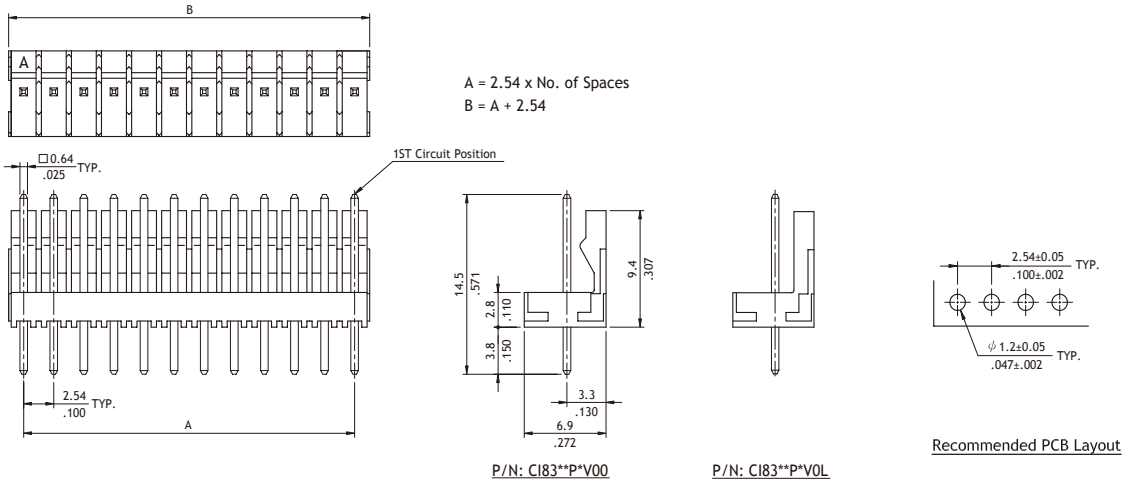

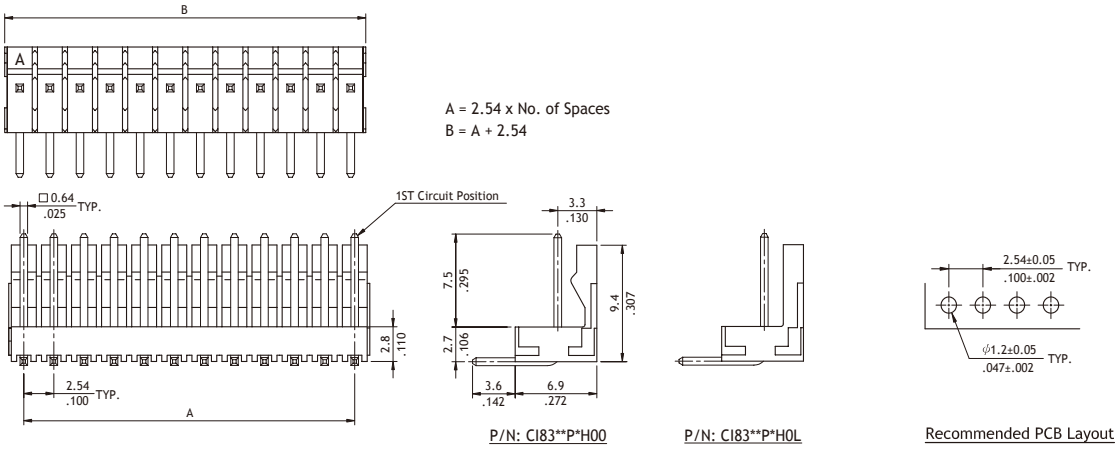

Ordering Code

①	②	③	④	⑤	⑥
CI83	36	P	1	V	00

① Series No.
② No. of Circuits: 02 to 36
③ P = DIP Header
④ Plating Code:
1 = Tin over Nickel

⑤ Type: V = Straight
H = Right Angle
⑥ Other Options:
00 = With Locking Ramp (Standard)
0L = Without Locking Ramp
*Special options consult manufacturer

CID7 2.54mm (.100") Wire to Board Housing/Terminal/Straight Headers

NEW

◎ Box type with locking slot
◎ Insulator : Glass filled polyester UL 94V-0 , color black
◎ With Tin plated 0.64mm square pin

RoHS Compliant

P/N	CID7**S0010

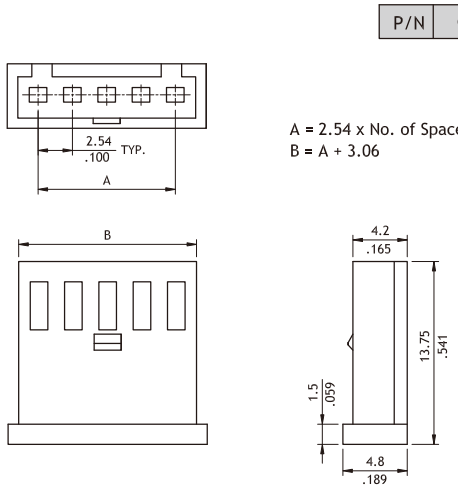

A = 2.54 x No. of Spaces
B = A + 3.06

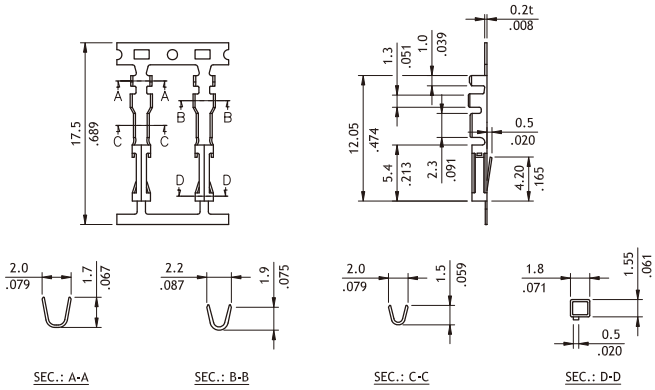

Part No.	Wire Range	Insulation Diameter	Reel Q'ty	Material
CID7T021PPS	AWG #22-#26	1.55 (.061) MAX.	15,000 PCS	Phosphor Bronze

P/N	CID7**P1V00

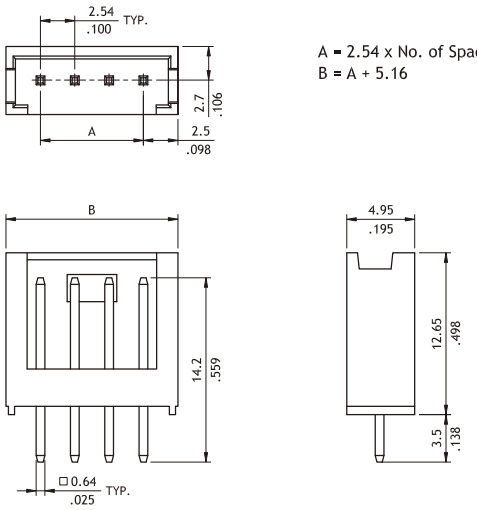

A = 2.54 x No. of Spaces
B = A + 5.16

P/N	CID7**P1H00

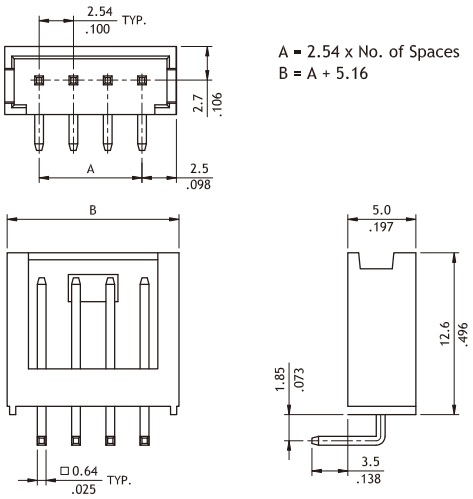

A = 2.54 x No. of Spaces
B = A + 5.16

Ordering Code

① ② ③ ④

C I D7	22	S	0010

① Series No.
② No. of Circuits: 02~22
③ S = Housing
④ Other Option:
0010= Color Black (Standard)

① ② ③ ④ ⑤ ⑥

C I D7	22	P	1	V	00

① Series No.
② No. of Circuits: 02~22
(Available:02 to 10)
③ P = DIP Header
④ Plating Code:
1= Tin over Nickel
⑤ Type : V=Straight
H=Right Angle
⑥ Other Option: 00 =Standard

CIL1 Series 3.50mm(.138") Board to Board Connectors

Mating Option 1			
Mating	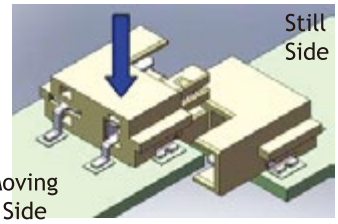 Step 1: Put the moving side vertically above the still side. Then, move it downward.	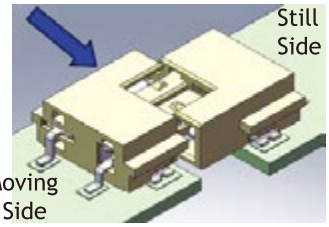 Step 2: Push the moving side horizontally into the still side.	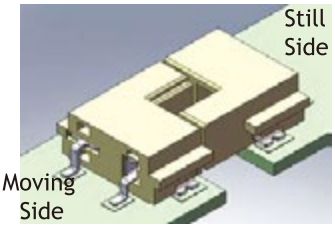 Step 3: Done
Unmating	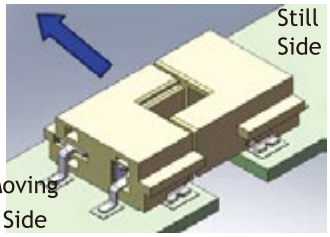 Step 1: Push out the moving side horizontally from the still side.	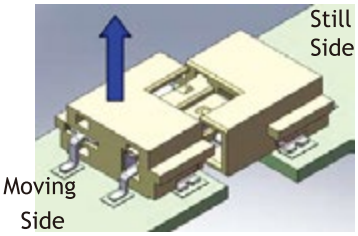 Step 2: Rise the moving side vertically after it separated from the still side.	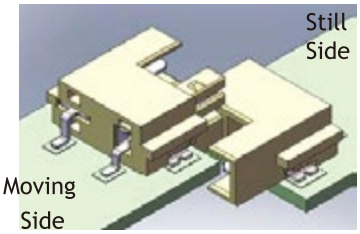 Step 3: Done

Mating Option 2		
Mating	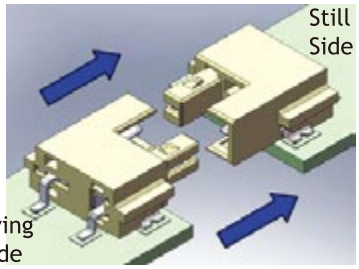 Step 1: Push in the moving side into the still side horizontally the still side.	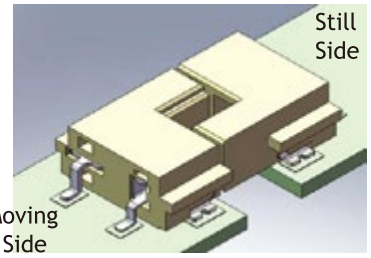 Step 2: Done
Unmating	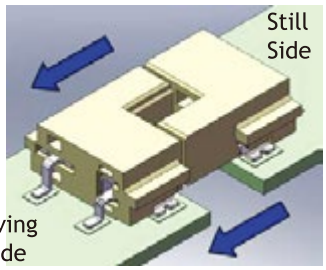 Step 1: Push out the moving side horizontally from the still side.	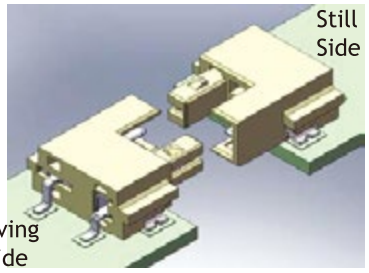 Step 2: Done

CIL1 Series 3.50mm(.138") Board to Board Connectors

◎ Simplify manufacturing procedure
◎ Reduce the Cost
◎ Insulator: High temperature plastic UL 94V-0

RoHS Compliant

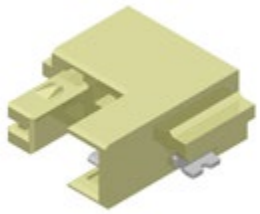

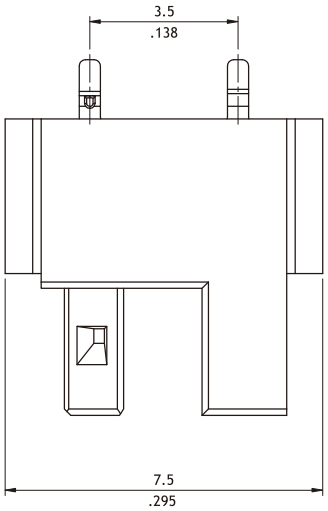

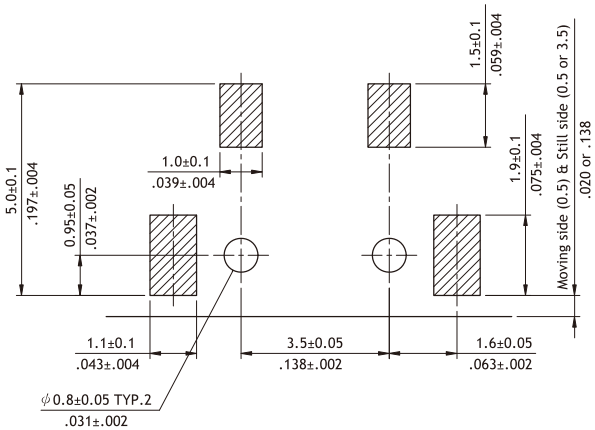

Recommended PCB Layout

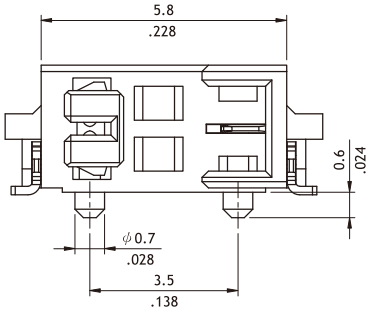

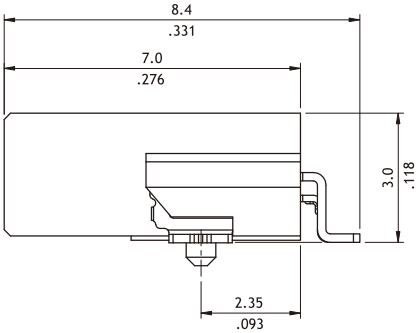

Ordering Code

①	②	③	④	⑤	⑥	⑦		⑧
CIL1	02	M	1	H	R	0	-	NH

① Series No.
② No. of Circuits: 02
③ M = SMT Type
④ Plating Code:
1 = Matte Tin over Nickel
⑤ Type: H = Side Entry
⑥ Packing Options:
R = Tape & Reel
⑦ Other Options:
0 = Standard
⑧ Process: -NH = For Lead Free IR process and Halogen-Free

CID3 Series 3.96mm(.100") IDC Type Connectors

◎ Terminal: Tin-plated phosphor bronze
◎ Housing: UL94V-2 Nylon 66
◎ With or without locking ramp and polarizing tabs
◎ Feed-Thru and Closed End type
◎ Wire range AWG #18 ~ #26 (Flat ribbon cable)
◎ Mate with CI52 Headers

RoHS Compliant

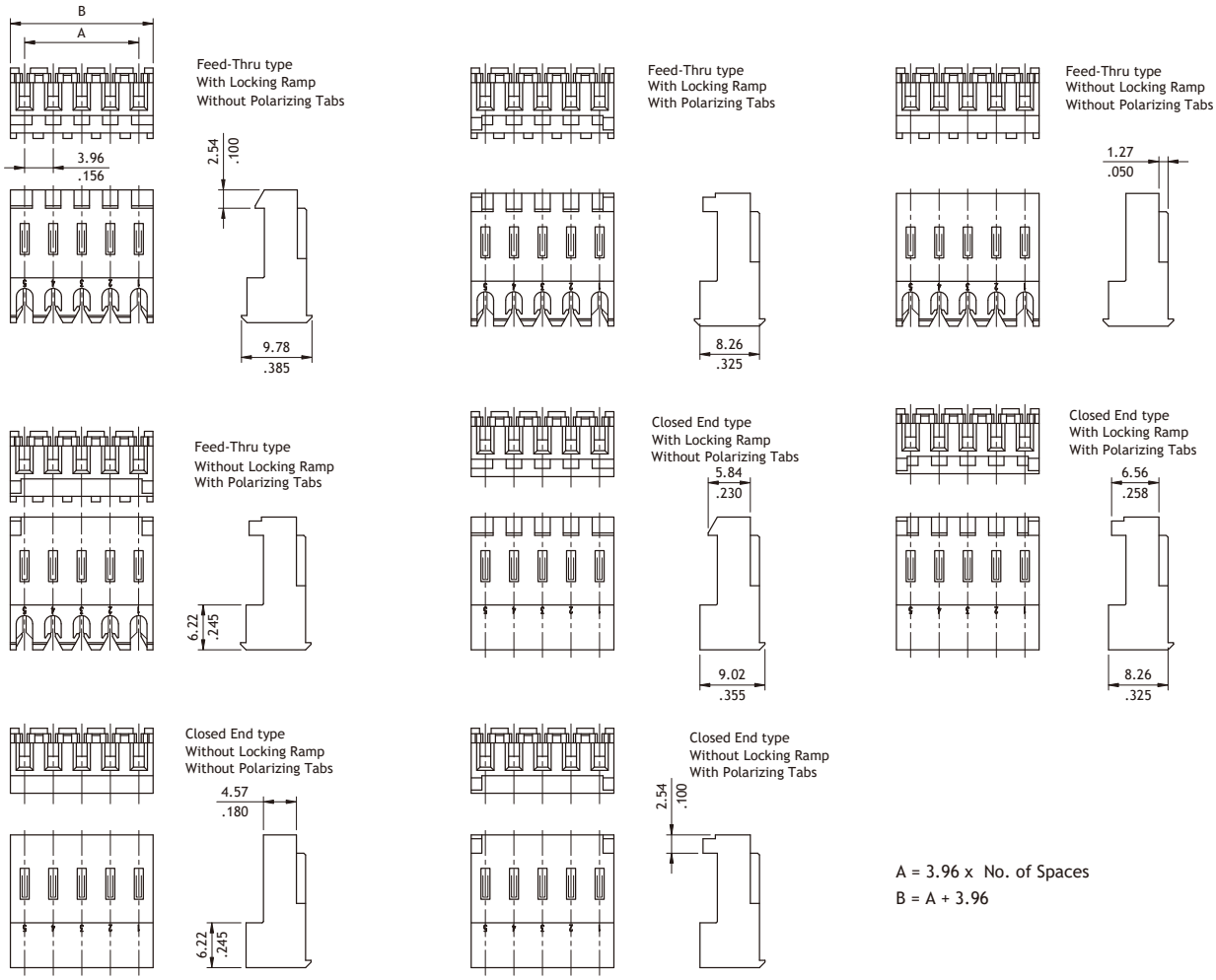

A = 3.96 x No. of Spaces
B = A + 3.96

Ordering Code

①	②	③	④	⑤	⑥	⑦
CID3	18	S	1	A	0	0

① Series No.
② No. of Circuits: 02 to 18
③ S = Housing
④ Plating Code:
1 = Tin plated over Nickel
⑤ Type: A = Closed End Type
B = Feed-Through Type

⑥ Color Options:
0 = Color white, for AWG #24
3 = Color red, for AWG #22
4 = Color orange, for AWG #18
5 = Color yellow, for AWG #20
7 = Color blue, for AWG #26

⑦ Other Options:
0 = W/O Polarizing Tabs & Locking Ramp
L = W/O Polarizing Tabs, With Locking Ramp
P = With Polarizing Tabs, Without Locking Ramp
R = With Polarizing Tabs, With Locking Ramp

CI51 Series 3.96mm(.156") Wire to Board Connectors Housing & Terminal

◎ With locking ramp
◎ Mate with CI51, CI77 Header
◎ Can be used with CI51 crimp clip terminal
◎ Insulator: Nylon 66 UL 94V-2, Color Nature
◎ Terminal: Tin plated Brass or Phospohor Bronze

RoHS Compliant HF

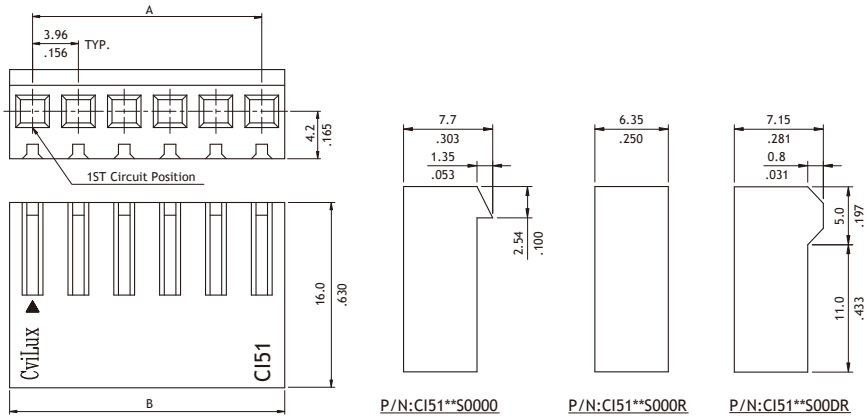

Circuits	Dimension	
	A	B
2	3.96(.156)	8.0(.315)
3	7.92(.312)	12.0(.472)
4	11.88(.468)	15.9(.626)
5	15.84(.624)	19.9(.783)
6	19.80(.780)	23.9(.941)
7	23.76(.935)	28.0(1.102)
8	27.72(1.091)	32.0(1.260)
9	31.68(1.247)	35.9(1.413)
10	35.64(1.403)	39.9(1.571)
11	39.60(1.559)	43.9(1.728)
12	43.56(1.715)	47.8(1.882)
13	47.52(1.871)	51.8(2.039)
14	51.48(2.027)	55.7(2.193)
15	55.44(2.183)	59.7(2.350)
16	59.40(2.339)	63.7(2.508)
17	63.36(2.494)	67.6(2.661)
18	67.32(2.650)	71.6(2.819)
19	71.28(2.806)	75.5(2.972)
20	75.24(2.962)	79.5(3.130)

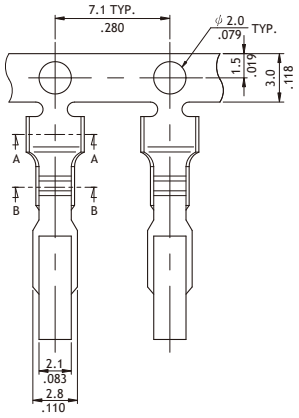

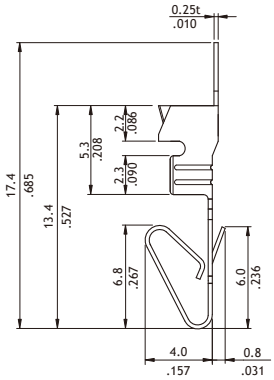

Wire Range	Insulation	Reel Q'ty
AWG #18-#24	2.10 (.083) MAX.	5,000 PCS

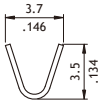

SEC: A-A

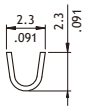

SEC: B-B

Ordering Code

① ② ③ ④
CI51 20 S 0000

① Series No.
② No. of Circuits: 02 to 20
③ S = Housing
④ Other Options:
0000 = With Locking Ramp (Standard)
000R = Without Locking Ramp
00DR = Low force Locking Ramp
*Special options consult manufacturer

① ② ③ ④ ⑤
CI51 T03 1 B E0

① Series No.
② Type: T03 = AWG #18 ~ #24
③ Plating Code: 1 = Tin over Nickel
④ Material: P = Phosphor Bronze
⑤ Other Options: E0 = Standard

CI51 Series 3.96mm(.156") Wire to Board Connectors DIP Headers

◎ With locking wall
◎ Mate with CI51 Housing
◎ Insulator: Nylon 66 UL 94V-2, Color Nature
◎ With Tin plated 1.14mm square pin

RoHS Compliant HF

P/N CI51**P1V00

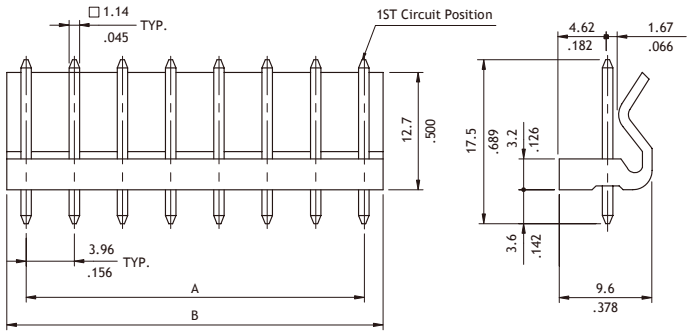

Circuits	Dimension	
	A	B
2	3.96(.156)	7.92(.312)
3	7.92(.312)	11.88(.468)
4	11.88(.468)	15.84(.624)
5	15.84(.624)	19.8(.780)
6	19.80(.780)	23.76(.935)
7	23.76(.935)	27.72(1.091)
8	27.72(1.091)	31.68(1.247)
9	31.68(1.247)	35.64(1.403)
10	35.64(1.403)	39.6(1.559)
11	39.60(1.559)	43.56(1.715)
12	43.56(1.715)	47.52(1.871)
13	47.52(1.871)	51.48(2.027)
14	51.48(2.027)	55.44(2.183)
15	55.44(2.183)	59.4(2.339)
16	59.40(2.339)	63.36(2.494)
17	63.36(2.494)	67.32(2.650)
18	67.32(2.650)	71.28(2.806)
19	71.28(2.806)	75.24(2.962)
20	75.24(2.962)	79.2(3.118)

P/N CI51**P1H00

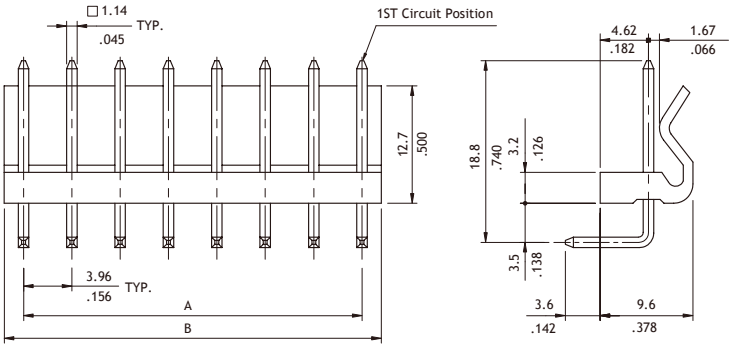

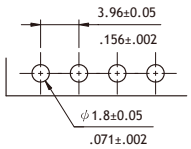

Recommended PCB Layout

Ordering Code

①	②	③	④	⑤	⑥
CI51	20	P	1	V	00

① Series No.
② No. of Circuits: 02 to 20
③ P = DIP Header
④ Plating Code:
1 = Tin over Nickel

⑤ Type: V = Straight
H = Right Angle
⑥ Other Options:
00 = Standard
*Special options consult manufacturer

CI52 Series 3.96mm(.156") Wire to Board Connectors Housing & Terminal

- ◎ With locking latch
- ◎ Mate with CI52 header
- ◎ Can be used with CI52 crimp clip terminal
- ◎ Insulator: Nylon 66 UL 94V-0 , Color Nature
- ◎ Terminal: Tin plated Brass or Phosphor Bornze

RoHS Compliant HF

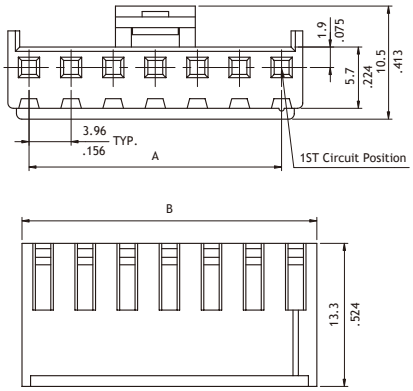

Circuits	Dimension	
	A	B
2	3.96(.156)	7.9(.311)
3	7.92(.312)	11.9(.469)
4	11.88(.468)	15.8(.622)
5	15.84(.624)	19.8(.780)
6	19.80(.780)	23.8(.937)
7	23.76(.935)	27.7(1.091)
8	27.72(1.091)	31.7(1.248)
9	31.68(1.247)	35.6(1.402)
10	35.64(1.403)	39.6(1.559)
11	39.60(1.559)	43.6(1.717)
12	43.56(1.715)	47.5(1.870)

P/N	CI52**SM000

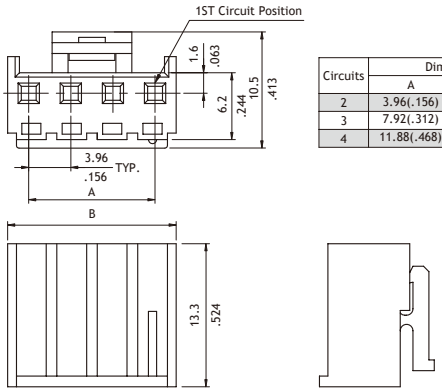

Circuits	Dimension	
	A	B
2	3.96(.156)	7.92(.312)
3	7.92(.312)	11.88(.468)
4	11.88(.468)	15.84(.634)

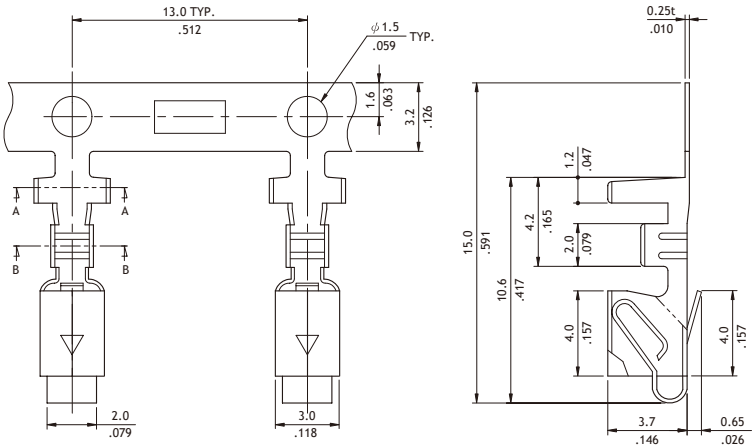

Part No.	Wire Range	Insulation Diameter	Reel Q'ty
CI52T021*E0	AWG #22~#28	1.90 (.075) MAX.	3,500 PCS
CI52T031*E0	AWG #18~#22	2.70 (.106) MAX.	3,500 PCS

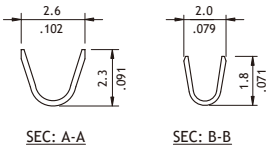

SEC: A-A SEC: B-B

P/N:CI52T021*E0

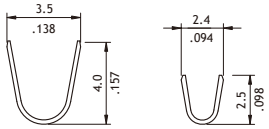

SEC.: A-A SEC.: B-B

P/N:CI52T031*E0

Ordering Code

① ② ③ ④

C I 5 2 | 1 2 | S | 0 0 0 0

① Series No.
② No. of Circuits: 02 to 12
③ S = Housing
④ Other Options:
0000 = Standard
M000 = Special Type
*Special options consult manufacturer

① ② ③ ④ ⑤

C I 5 2 | T 0 3 | 1 | B | E 0

① Series No.
② Type: T02 = AWG #22 ~ #28
T03 = AWG #18 ~ #22
③ Plating Code: 1 = Tin over Nickel
④ Material: B = Brass ; P = Phosphor Bronze
⑤ Other Options: E0 = Standard

CI52 Series 3.96mm(.156") Wire to Board Connectors DIP Headers

◎ With locking wall
◎ Mate with CI52 Housing
◎ Insulator: Polyamide UL 94V-0, Color Nature
◎ With Tin plated 1.14mm square pin

RoHS Compliant

P/N	CI52**P1V00-LF

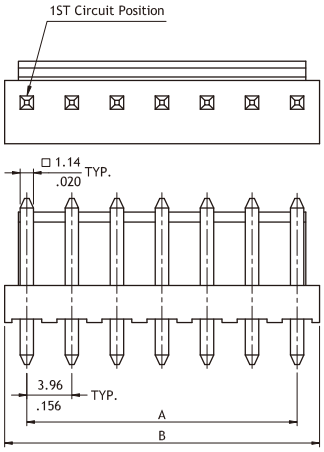

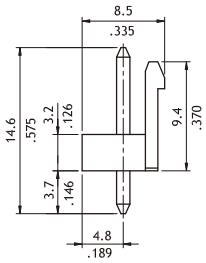

Circuits	Dimension	
	A	B
2	3.96(.156)	7.8(.307)
3	7.92(.312)	11.8(.465)
4	11.88(.468)	15.8(.622)
5	15.84(.624)	19.7(.776)
6	19.80(.780)	23.7(.933)
7	23.76(.936)	27.6(1.087)
8	27.72(1.091)	31.6(1.244)
9	31.68(1.247)	35.5(1.398)
10	35.64(1.403)	39.5(1.555)
11	39.60(1.559)	43.5(1.713)
12	43.56(1.715)	47.4(1.866)
13	47.52(1.871)	51.4(2.024)

P/N	CI52**P1H00-LF

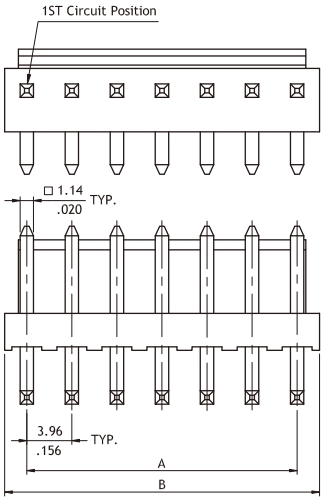

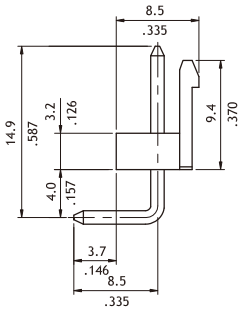

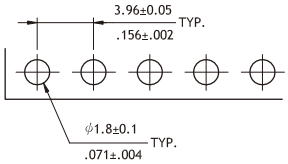

Recommended PCB Layout

Ordering Code

① ② ③ ④ ⑤ ⑥ ⑦

C I 5 2 | 1 3 | P | 1 | V | 0 0 - L F

① Series No.
② No. of Circuits: 02 to 13
③ P = DIP Header
④ Plating Code: 1 = Tin over Nickel
⑤ Type: V = Straight
H = Right Angle
⑥ Other Options:
00 = Standard
*Special options consult manufacturer
⑦ Process: -LF = For Lead Free soldering process

CI52 Series 7.92mm(.312") Wire to Board Connectors DIP Headers

◎ With locking wall
◎ Mate with CI52 Housing
◎ Insulator: Polyamide UL 94V-0, Color Nature
◎ With Tin plated 1.14mm Square pin

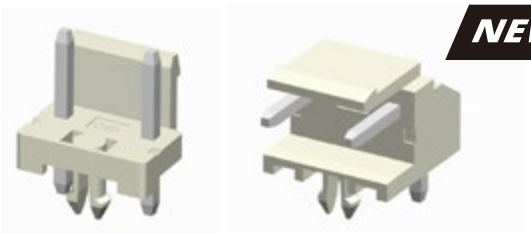

RoHS Compliant HF

P/N	CI52**P1VD0

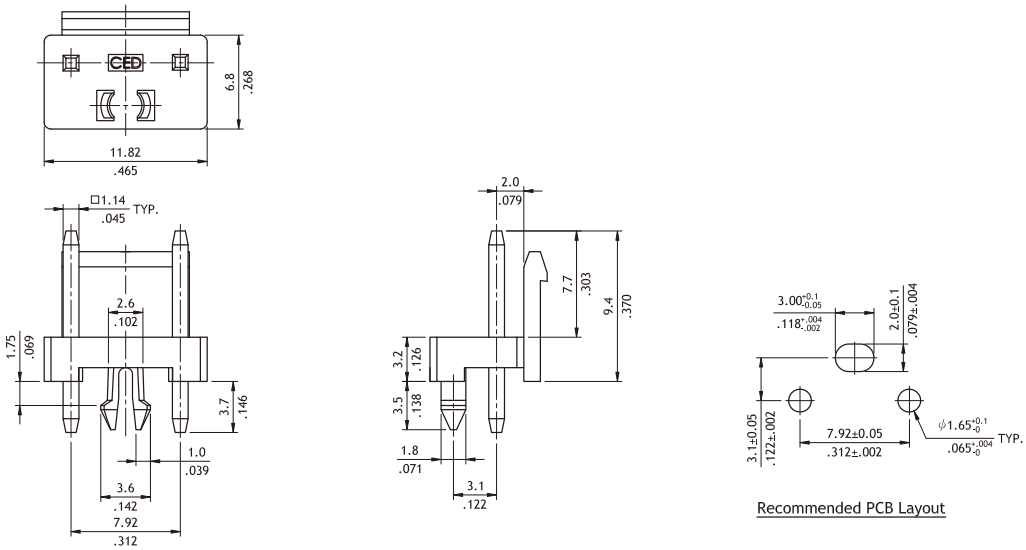

Recommended PCB Layout

P/N	CI52**P1HD0

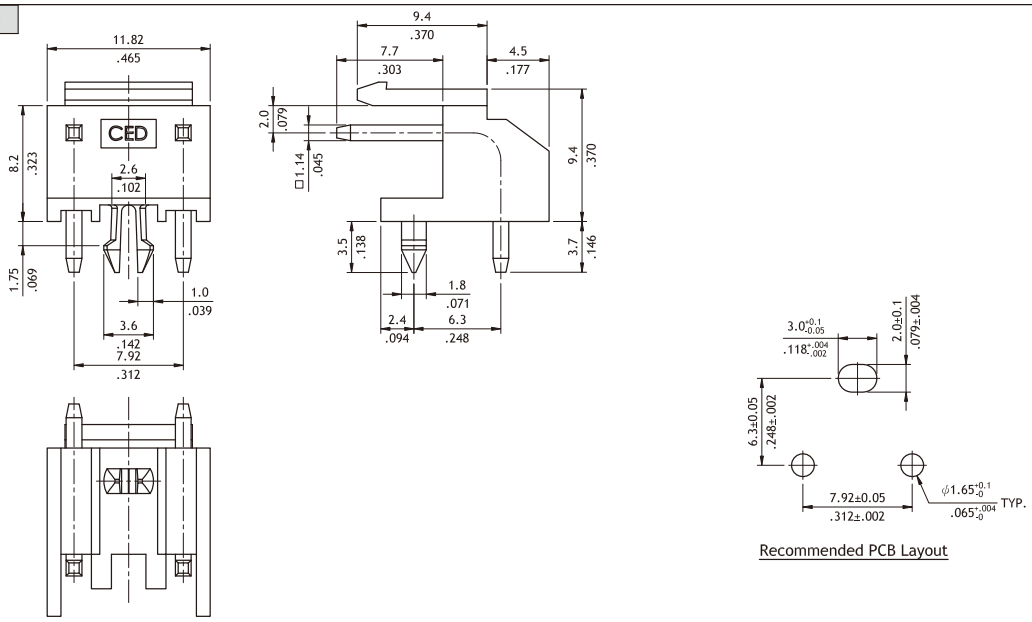

Recommended PCB Layout

Ordering Code

①	②	③	④	⑤	⑥
CI52	02	P	1	V	D0

① Series No.
② No. of Circuits: 02
③ P = Pin Header
④ Plating Code: 1 = Matte Tin over Nickel
⑤ Type: V = Straight
H = Right Angle
⑥ Other Options:
D0 = With Plastic Board Lock

CI82 Series 3.96mm(.156") Friction Lock Breakway Headers

- ◎ Options with straight and right angle tails
- ◎ Available with flat back wall for polarization
- ◎ Mate with most of 3.96mm pitch connector in the market
- ◎ Insulator: Glass filled polyester UL 94V-0, Color White
- ◎ With Tin plated 1.14mm square pin

RoHS Compliant

P/N	CI82**P1V00

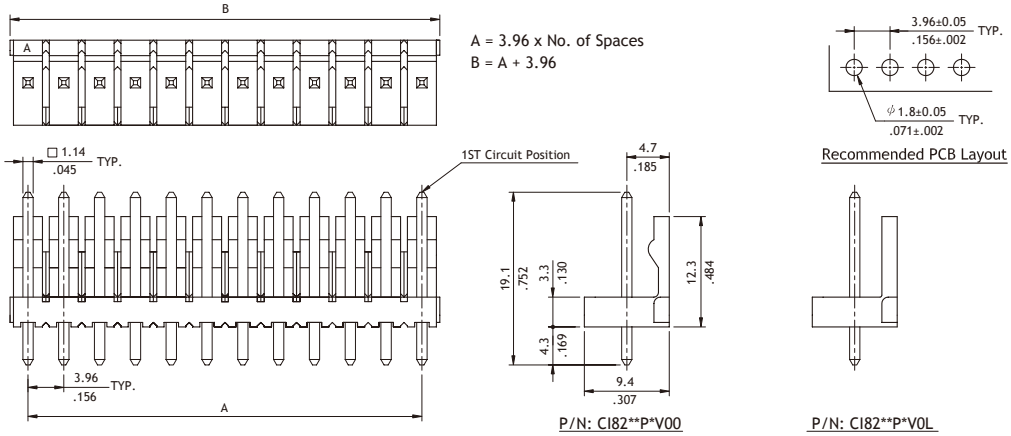

P/N	CI82**P1H00

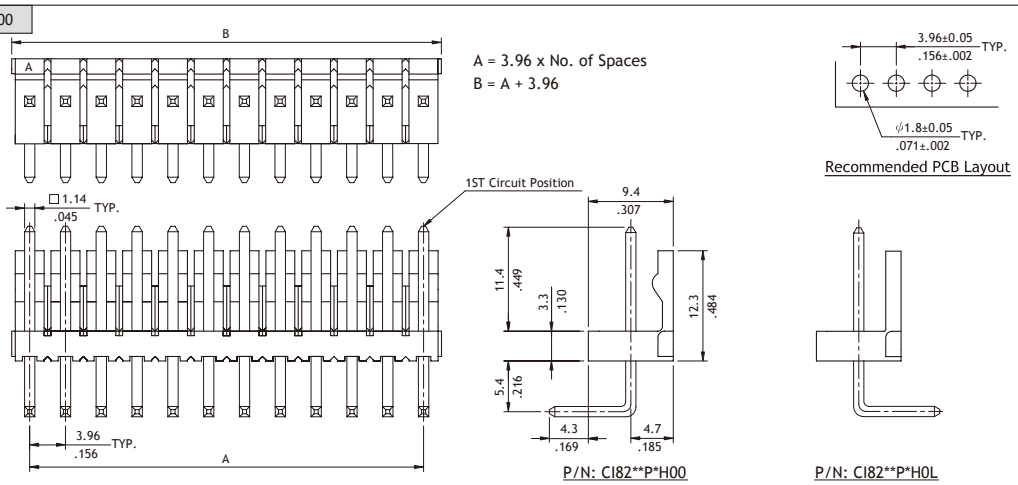

Ordering Code

①	②	③	④	⑤	⑥
CI82	24	P	1	V	00

① Series No.
② No. of Circuits: 02 to 24
③ P = DIP Header
④ Plating Code:
1 = Tin over Nickel

⑤ Type: V = Straight
H = Right Angle
⑥ Other Options:
00 = With Locking Ramp (Standard)
0L = Without Locking Ramp
*Special options consult manufacturer

CID1 Series 4.00mm(.157") Wire to Board Connecors SMT Header

- ◎ Surface mount terminal strips with connection
- ◎ Direct push-in of solid conductors
- ◎ A total height of only 4.5mm helps minimize shadowing in LED applications
- ◎ Packaged in tape-and-reel for automated SMT processes
- ◎ Large flat area for easy pick-n-place
- ◎ Wiring ports with balcony design – creates "lead-in" for ease of wiring, even at a slight angle

NEW

RoHS Compliant

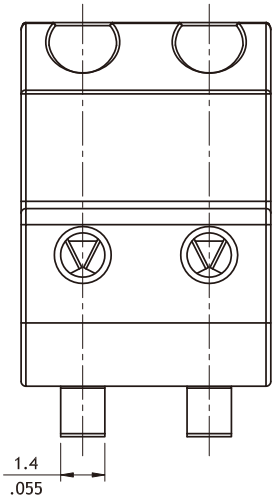

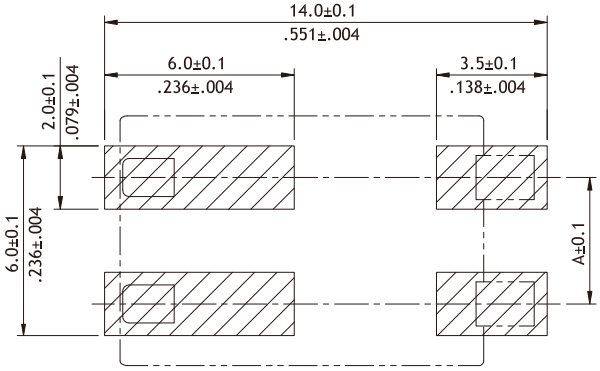

Recommended PCB Layout

Circuits	Dimension	
	A	B
1	-	3.9(.154)
2	4.0(.157)	7.9(.311)
3	8.0(.315)	11.9(.469)

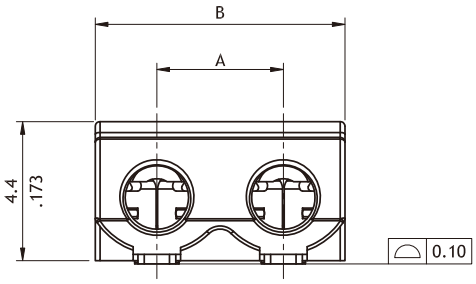

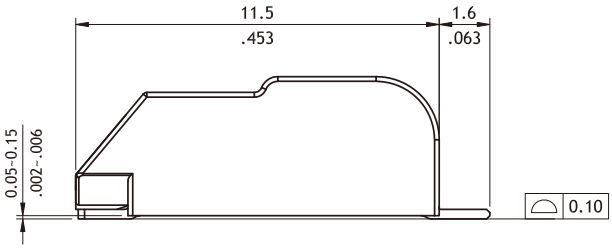

Ordering Code

①	②	③	④	⑤	⑥	⑦	⑧
CID1	03	M	1	H	R	0	-NH

① Series No.
② No. of Circuits: 01 to 03
③ M = SMT Type Header
④ Plating Code:
1 = Matte Tin Plated over Nickel
⑤ Type: H = Side Entry
⑥ Packing option
R= Tape & Reel
⑦ Other option:
0=Standard
⑧ Process: -NH = For Lead Free IR process and Halogen-Free

CI55 Series 5.08mm(.200") Wire to Board Connectors

- ◎ Housing with locking ramp
- ◎ Header with locking wall
- ◎ Can be used with CI51 crimp clip terminal
- ◎ Insulator: Nylon 66 UL 94V-2, Color Nature
- ◎ With Tin plated 1.14mm square pin
- ◎ Terminal: Tin plated Brass

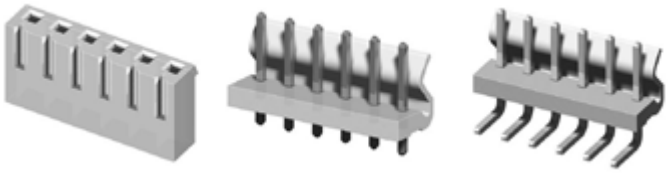

RoHS Compliant HF

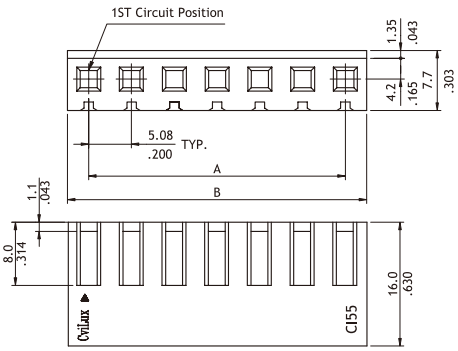

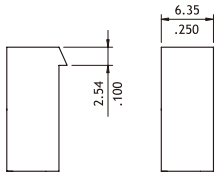

P/N:CI55**S0000 P/N:CI55**S000R

Circuits	Dimension	
	A	B
2	5.08(.200)	10.1(.398)
3	10.16(.400)	15.2(.598)
4	15.24(.600)	20.5(.807)
5	20.32(.800)	25.3(.996)
6	25.40(1.00)	30.6(1.205)
7	30.48(1.20)	35.5(1.398)
8	35.56(1.40)	40.8(1.606)
9	40.64(1.60)	45.6(1.795)
10	45.72(1.80)	50.7(1.996)

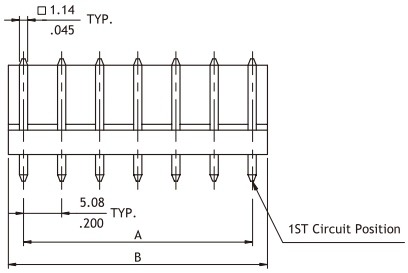

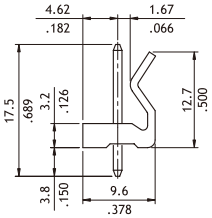

Circuits	Dimension	
	A	B
2	5.08(.200)	10.2(.402)
3	10.16(.400)	15.2(.598)
4	15.24(.600)	20.3(.799)
5	20.32(.800)	25.4(1.000)
6	25.40(1.000)	30.5(1.201)
7	30.48(1.200)	35.6(1.402)
8	35.56(1.400)	40.6(1.598)
9	40.64(1.600)	45.7(1.799)
10	45.72(1.800)	50.8(2.000)

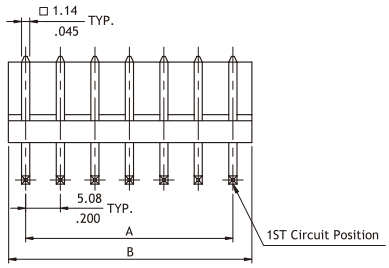

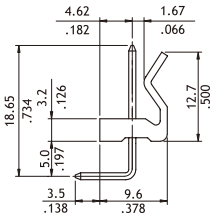

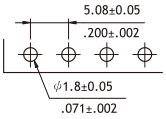

Recommended PCB Layout

Ordering Code

① ② ③ ④

C I 5 5	1 0	S	0 0 0 0

① Series No.
② No. of Circuits: 02 to 10
③ S = Housing
④ Other Options:
0000 = Standard
000R = Without Locking Ramp
*Special options consult manufacturer

① ② ③ ④ ⑤ ⑥

C I 5 5	1 0	P	1	V	0 0

① Series No
② No. of Circuits: 02 to 10
③ P = DIP Header
④ Plating Code: 1 = Tin over Nickel
⑤ Type: V = Straight ; H = Right Angle
⑥ Other Options: 00 = Standard
*Special options consult manufacturer

CI77/CI78 Series 3.96mm(.156") / 5.00mm(.196") Breakaway Pin Headers

- ◎ Mate with CI51 and CID3 Connector
- ◎ Available straight and right angle type
- ◎ Options plating available
- ◎ Insulator: Glass filled polyester UL 94V-0, Color White
- ◎ With Tin plated 1.14mm square pin

RoHS Compliant

P/N	CI77**P1*00

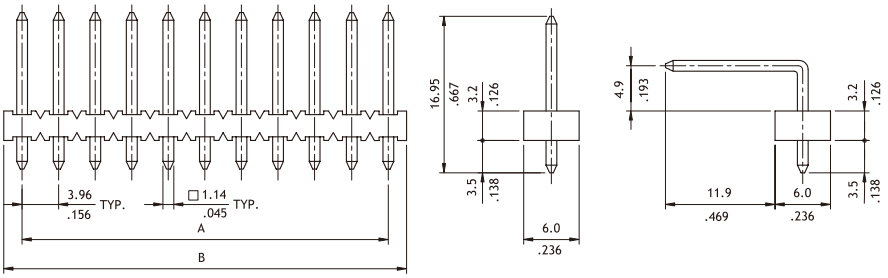

A = 3.96 x No. of Spaces
B = A + 3.96

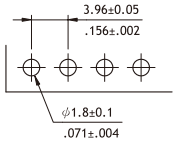

Recommended PCB Layout

P/N	CI78**P1*00

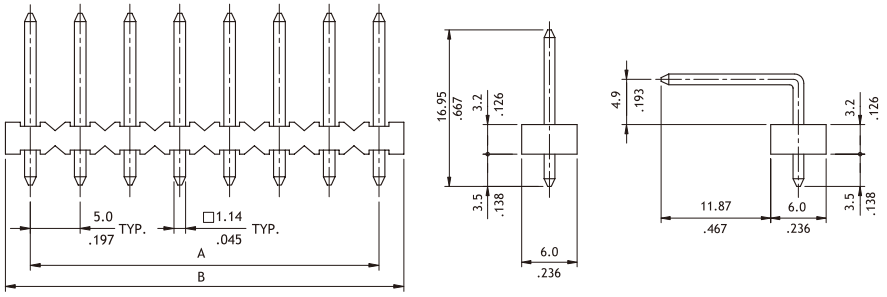

A = 5.0 x No. of Spaces
B = A + 5.0

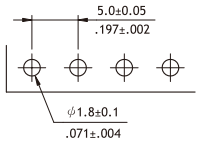

Recommended PCB Layout

Ordering Code

①	②	③	④	⑤	⑥
CI77	20	P	1	V	00

① Series No.
CI77 = 3.96mm center spacing
CI78 = 5.00mm center spacing
② No. of Circuits: 02 to 20
③ P = DIP Header
④ Plating Code: 1 = Tin over Nickel
⑤ Type: V = Straight
H = Right Angle
⑥ Other Options:
00 = Standard
*Special options consult manufacturer

CI94 Series Serial ATA Power Crimp Terminal & Receptacle Connectors

◎ Meet Serial ATA Specification
◎ Connector interface for both 2.5" and 3.5" devices
◎ Supporting power delivery with 12.0V , 5.0V , and 3.3V
◎ Insulator: Glass Filled Polyester

RoHS Compliant HF UL

P/N CI94T02*PP0

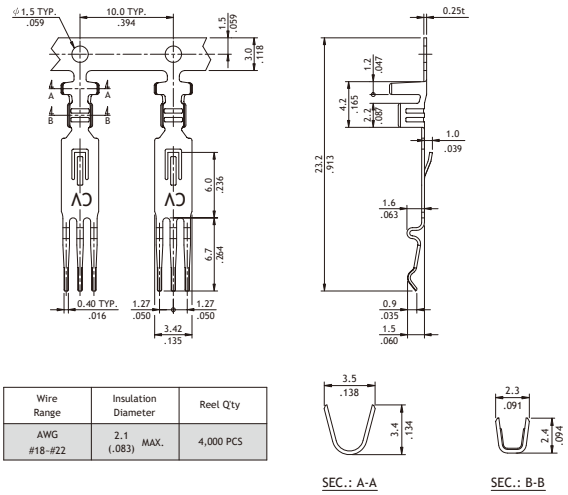

Wire Range	Insulation Diameter	Reel Q'ty
AWG #18~#22	2.1 (.083) MAX.	4,000 PCS

P/N CI94TA3*PP0

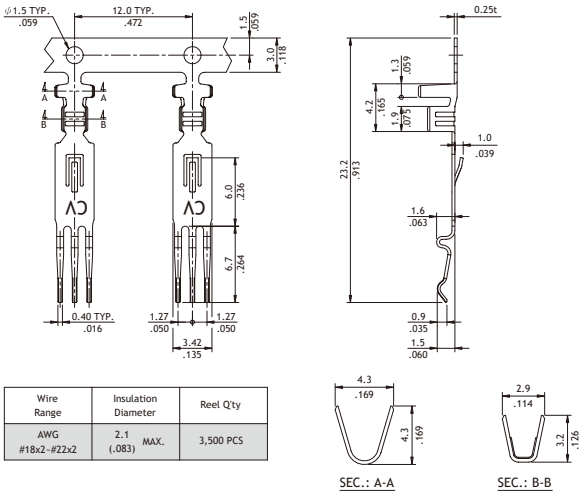

Wire Range	Insulation Diameter	Reel Q'ty
AWG #18x2~#22x2	2.1 (.083) MAX.	3,500 PCS

P/N CI94PF00100-NH

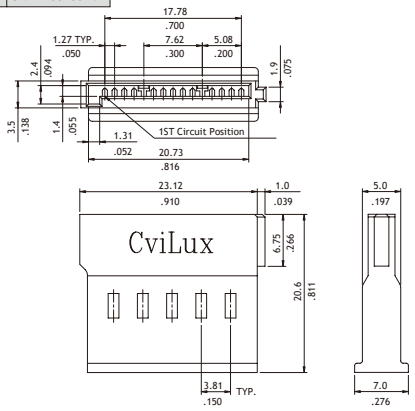

P/N CI94PF0010L-NH With Metal Latch

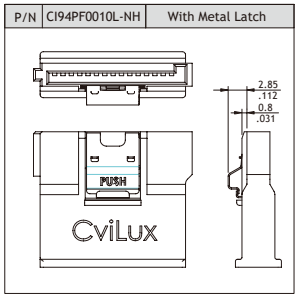

P/N CI94PF0010P-NH With Plastic Latch

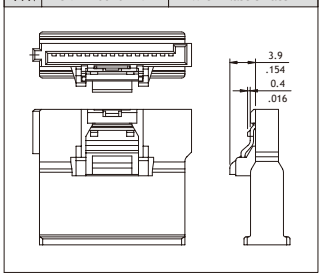

Ordering Code

① ② ③ ④ ⑤
CI94 TA3 A P P0

① Series No.
② Type: T03 = AWG #18 ~ #22
TA3 = AWG #18x2 ~ #20x2
③ Plating Code: A = Selective Gold flash over Nickel
④ Material: P = Phosphor Bronze
⑤ Other Options: P0 = Standard

① ② ③ ④ ⑤ ⑥
CI94 P F 001 00 - NH

① Series No
② P = Power
③ Type: F = Female
④ Color: 001 = Black
⑤ Other Options:
00 = Without Latch (Standard)
0L = With Metal Latch
0P = With Plastic Latch
⑥ Process:
-NH = Halogen-Free

CI94 Series Serial ATA Power IDC Type Receptacle Connectors

- ◎ Meet Serial ATA Specification
- ◎ Connector interface for both 2.5" and 3.5" devices
- ◎ Supporting power delivery with 12.0V, 5.0V, and 3.3V
- ◎ Insulator: Glass Filled Polyester
- ◎ Contact: Gold plated Phosphor Bronze

RoHS Compliant HF

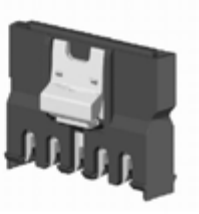

P/N	CI94PFI*1*0

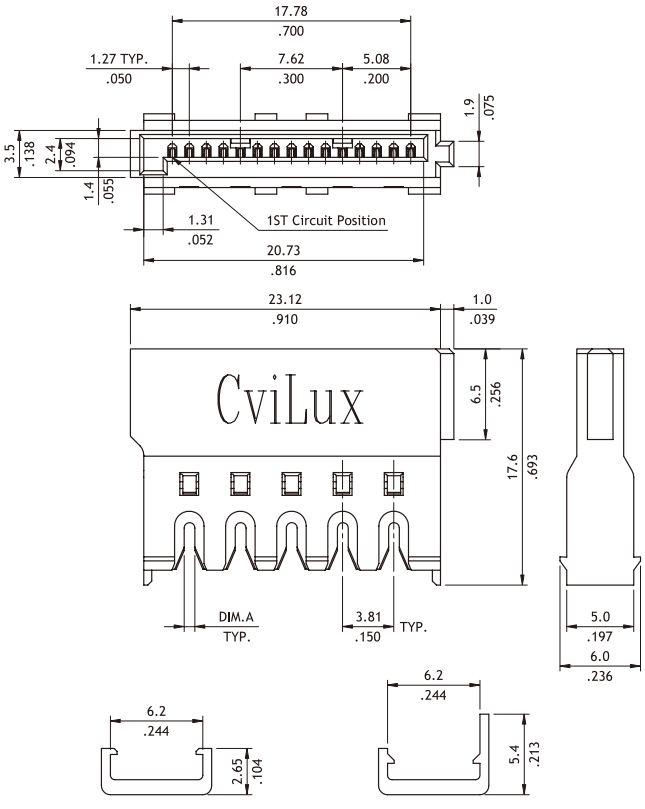

P/N:CI94PFIC010
(Through Cover)

P/N:CI94PFIC011
(One End Cover)

P/N	CI94PFI*1*L-NH	With Metal Latch

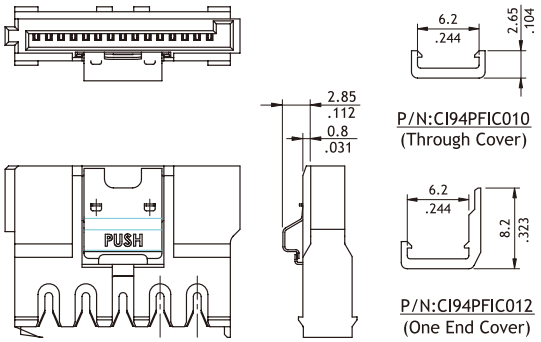

P/N:CI94PFIC010
(Through Cover)

P/N:CI94PFIC012
(One End Cover)

P/N	CI94PFI*1*P-NH	With Plastic Latch

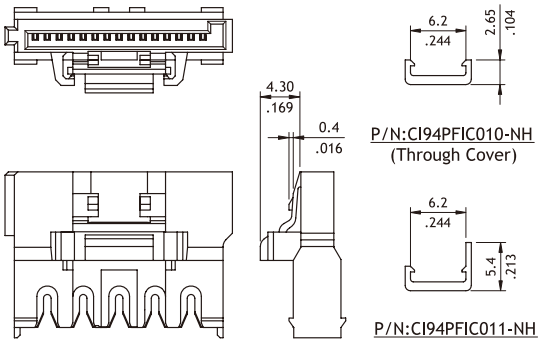

P/N:CI94PFIC010-NH
(Through Cover)

P/N:CI94PFIC011-NH
(One End Cover)

Ordering Code

①	②	③	④	⑤	⑥	⑦		⑧
CI94	P	FI	A	1	A	0	-	NH

① Series No.
② P = Power
③ Type: FI = Female & IDC Type
④ Plating Code:
A = Selective Gold flash over Nickel
⑤ Color: 1 = Black
⑥ Type: A = Accept AWG #18 (DIM.A = 0.75mm)
B = Accept AWG #20 ~ #22 (DIM.A = 0.60mm)
⑦ Other Options:
0 = Without Latch (Standard)
L = With Metal Latch
P = With Plastic Latch
⑧ Process: -NH = Halogen-Free

CI94 Series Serial ATA Power Solder Type Receptacle Connectors

- ◎ Meet Serial ATA Specification
- ◎ Connector interface for both 2.5" and 3.5" devices
- ◎ Supporting power delivery with 12.0V, 5.0V, and 3.3V
- ◎ Insulator: Glass Filled Polyester
- ◎ Contact: Gold plated Phosphor Bronze

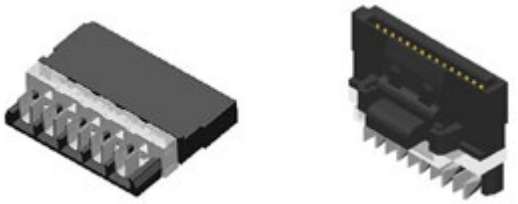

RoHS Compliant HF

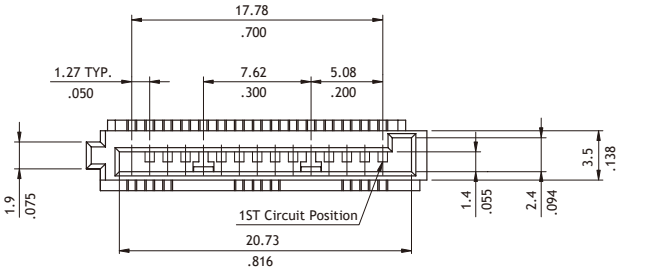

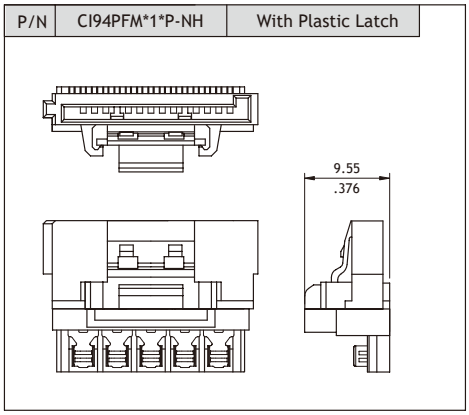

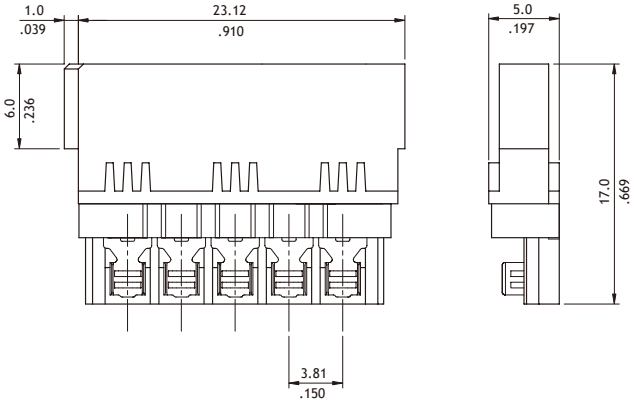

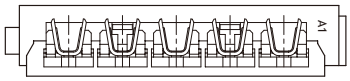

Ordering Code

①	②	③	④	⑤	⑥	⑦		⑧
CI94	P	FM	A	1	A	0	-	NH

① Series No.
② P = Power
③ Type: FM = Female & Solder Type for Molding process
④ Plating Code:
A = Selective Gold flash over Nickel
⑤ Color: 1 = Black
⑥ Type: 0 = AWG #18 ~ #22
A = AWG #18*2 ~ #22*2
⑦ Other Options:
0 = Without Latch
P = With Plastic Latch
⑧ Process: -NH = Halogen-Free

CI94 Series Serial ATA Power Molding Type Receptacle Connectors

- ◎ Crimp Type for Molding process
- ◎ Meet Serial ATA Specification
- ◎ Connector interface for both 2.5" and 3.5" devices
- ◎ Supporting power delivery with 12.0V , 5.0V , and 3.3V
- ◎ Unmating Force more than 2.0Kgf
- ◎ Insulator: Glass Filled Polyester
- ◎ Contact: Gold plated Phosphor Bronze

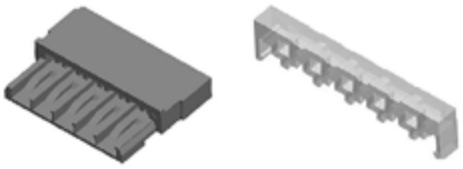

RoHS Compliant HF UL

Housing	
P/N	CI94PFM001B

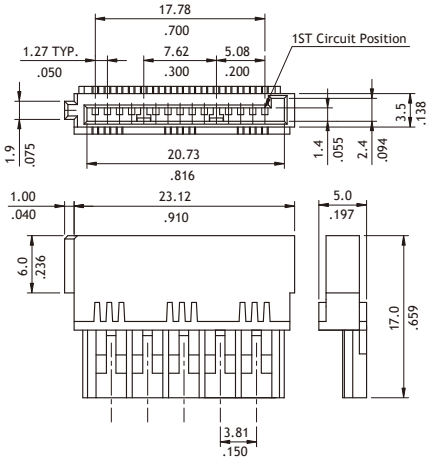

Housing (With Plastic Latch)	
P/N	CI94PFC*1*P-NH

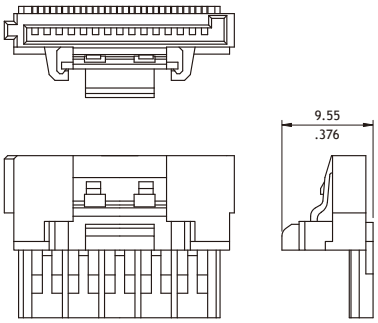

Cover	
P/N	CI94PFM000C

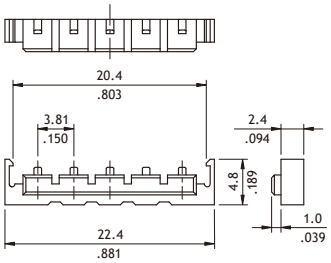

Terminal

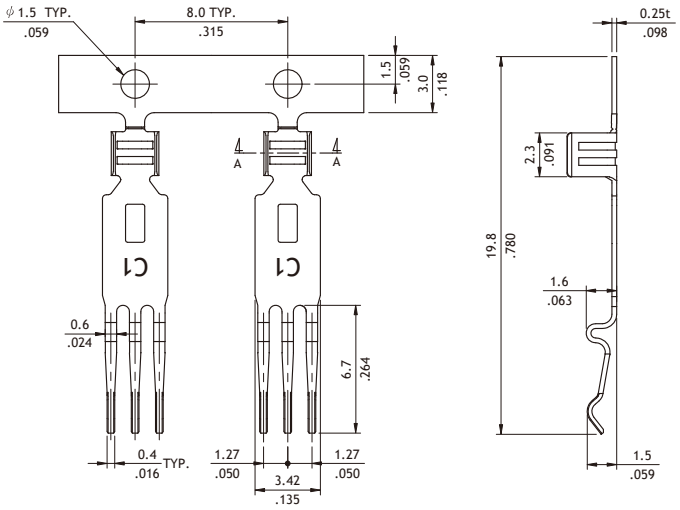

Part No.	Wire Range	Insulation Diameter	Reel Q'ty
CI94TM3*PP0	AWG #18~#22	2.1 (.083) MAX.	5,000 PCS
CI94TMA*PP0	AWG #18x2~#22x2	2.1 (.083) MAX.	5,000 PCS

P/N:CI94TMA*PP0

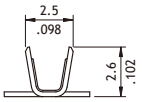

SEC.: A-A

P/N:CI94TM3*PP0

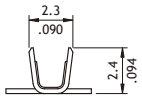

SEC.: A-A