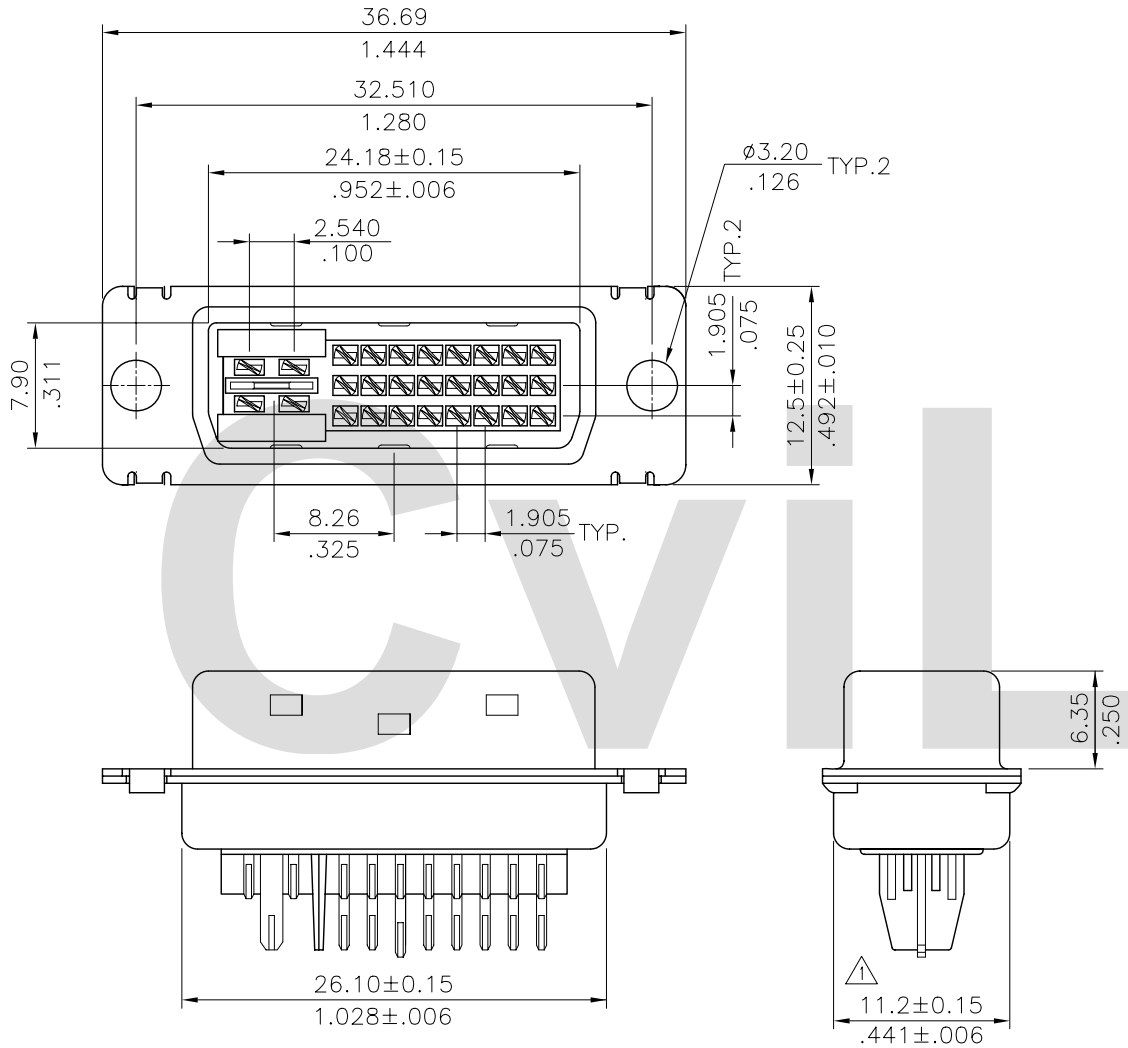

Materials:

* Insulator: Glass filled PBT UL 94V-0
  Color Black
* Shell: Steel with Nickel plated
* Contact: Brass

Ordering Code:

CU07	29	P	A	S	I	0
①	②	③	④	⑤	⑥	⑦

① Series No.
② Contacts: 29= 24+4+Key
③ Contact type: P= Plug
④ Plating code:
A= Selective Gold flash plated over 1.27μm(50μ") Nickel
⑤ Tail style:S= Solder Type
⑥ Product type: I= Integrated Type
⑦ Option: 0= Standard

RoHS Compliant

SYM	NAME	DATE	REVISIONS
4			
3			
2			
1	Sandy	8/31-09'	ECN09442

CVILUX CORP
2009.09.08
ISSUED

		DATE
DRAWN BY:	Sandy	8/31-09'
ENGINEER:	Eisley	9/1-09'
CHECKED BY:	David	9/1-09'
APPROVED BY:	Alex	9/1-09'

UNIT: mm / inch

TOLERANCE UNLESS OTHERWISE SPECIFIED

.X ± 0.30/.012	X.° ± 1°
.XX ± 0.20/.008	.X° ±
.XXX ± 0.10/.004	.XX° ±

TITLE: DVI STRAIGHT PLUG CONN. (DIGITAL 24+4+KEY)

MATERIAL:

FINISH:

瀚荃股份有限公司
CviLux Corporation

DRAWING NO.	CU0727SB	PART NO.	CU0729PASI0
SCALE	2 / 1	SHEET 1 OF 1	