PO49HSTL3802A

3.3V 1:5 Differential to TTL Translator Driver

900MHz TTL/CMOS Potato Chip

FEATURES:	DESCRIPTION:
. Patented technology . Max input frequency > 1GHz . Operating frequency up to 900MHz with 2pf load . Operating frequency up to 700MHz with 5pf load . Operating frequency up to 350MHz with 15pf load . Operating frequency up to 140MHz with 50pf load . Very low output pin to pin skew < 100ps . Very low pulse skew < 100ps . VCC = 1.65V to 3.6V . Propagation delay < 2.5ns max with 15pf load . Low input capacitance: 3pf typical . 1:5 fanout . Available in 16pin 150mil wide QSOP package . Available in 16pin 173mil wide TSSOP package	Potato Semiconductor's PO49HSTL3802G is designed for world top performance using submicron CMOS technology to achieve 900MHz TTL output frequency with less than 100ps output pulse skew. PO49HSTL3802G is a 3.3V 1 high speed comparator inputs to 5 TTL output buffered driver to achieve higher than 900MHz output frequency. Typical applications are HSTL, PECL, LVDS to TTL translator, crystal or ring oscillator, clock and signal distribution.

Pin Configuration

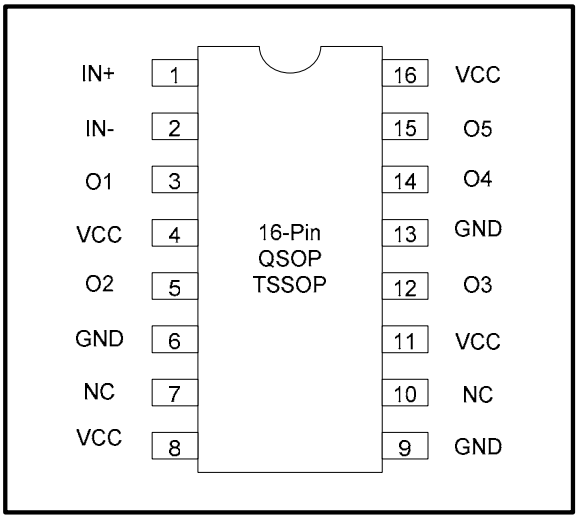

Logic Block Diagram

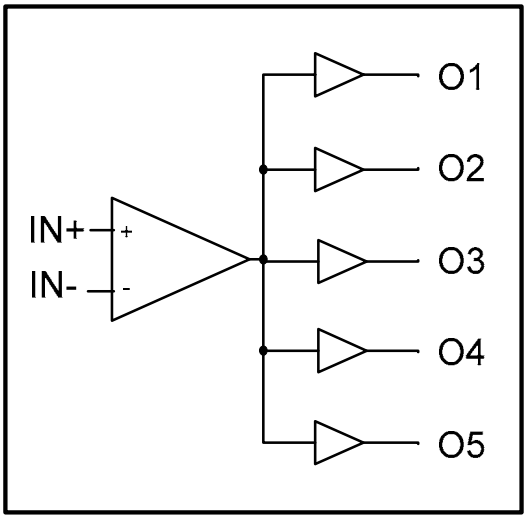

Pin Description

Pin Name	Description
IN+, IN-	Inputs
O1 to O5	Outputs

900MHz TTL/CMOS Potato Chip

Maximum Ratings

Description	Max	Unit
Storage Temperature	-65 to 150	°C
Operation Temperature	-40 to 85	°C
Operation Voltage	-0.5 to +4.6	V
Input Voltage	-0.5 to Vcc+0.5	V
Output Voltage	-0.5 to Vcc+0.5	V

Note:
stresses greater than listed under Maximum Ratings may cause permanent damage to the device. This is a stress rating only and functional operation of the device at these or any other conditions above those indicated in the operational sections of this specification is not implied. Exposure to absolute maximum rating conditions for extended periods may affect reliability specification is not implied.

DC Electrical Characteristics

Symbol	Description	Test Conditions	Min	Typ	Max	Unit
V_{OH}	Output High voltage	Vcc=3V Vin=VIH or VIL, IOH= -12mA	2.4	3	-	V
V_{OL}	Output Low voltage	Vcc=3V Vin=VIH or VIL, IOH=12mA	-	0.3	0.5	V
V_{IH}	Input High voltage	Guaranteed Logic HIGH Level (Input Pin)	2	-	Vcc	V
V_{IL}	Input Low voltage	Guaranteed Logic LOW Level (Input Pin)	-0.5	-	0.8	V
I_{IH}	Input High current	Vcc = 3.6V and Vin = 3.6V	-	-	1	uA
I_{IL}	Input Low current	Vcc = 3.6V and Vin = 0V	-	-	-1	uA
V_{IK}	Clamp diode voltage	Vcc = Min. And IIN = -18mA	-	-0.7	-1.2	V

Notes:
1. For conditions shown as Max. or Min., use appropriate value specified under Electrical Characteristics for the applicable device type.
2. Typical values are at Vcc = 3.3V, 25 °C ambient.
3. This parameter is guaranteed but not tested.
4. Not more than one output should be shorted at one time. Duration of the test should not exceed one second.
5. VoH = Vcc – 0.6V at rated current

900MHz TTL/CMOS Potato Chip

Power Supply Characteristics

Symbol	Description	Test Conditions (1)	Min	Typ	Max	Unit
Icc_Q	Quiescent Power Supply Current	Vcc=Max, Vin=Vcc or GND	-	0.1	30	uA

Notes:
1. For conditions shown as Max. or Min., use appropriate value specified under Electrical Characteristics for the applicable device type.
2. Typical values are at Vcc = 3.3V, 25°C ambient.
3. This parameter is guaranteed but not tested.
4. Not more than one output should be shorted at one time. Duration of the test should not exceed one second.

Capacitance

Parameters (1)	Description	Test Conditions	Typ	Max	Unit
Cin	Input Capacitance	Vin = 0V	3	4	pF
Cout	Output Capacitance	Vout = 0V	-	6	pF

Notes:
1 This parameter is determined by device characterization but not production tested.

Switching Characteristics

Symbol	Description	Test Conditions (1)	Max	Unit
t_{PLH}	Propagation Delay A to Bn	CL = 15pF	2.5	ns
t_{PHL}	Propagation Delay A to Bn	CL = 15pF	2.5	ns
tr/tf	Rise/Fall Time	0.8V – 2.0V	0.8	ns
tsk(p)	Pulse Skew (Same Package)	CL = 15pF,V+ = 125MHz, V- = 1.5v	0.1	ns
tsk(o)	Output Pin to Pin Skew (Same Package)	CL = 15pF,V+ = 125MHz, V- = 1.5v	0.1	ns
tsk(pp)	Output Skew (Different Package)	CL = 15pF,V+ = 125MHz, V- = 1.5v	0.4	ns
fmax	Input Frequency	CL = 50pF	140	MHz
fmax	Input Frequency	CL =15pF	350	MHz
fmax	Input Frequency	CL = 5pF	700	MHz
fmax	Input Frequency	CL = 2pF	900	MHz

Notes:
1. See test circuits and waveforms.
2. tpLH, tpHL, tsk(p), and tsk(o) are production tested. All other parameters guaranteed but not production tested.
3. Airflow of 1m/s is recommended for frequencies above 133MHz

900MHz TTL/CMOS Potato Chip

Test Waveforms

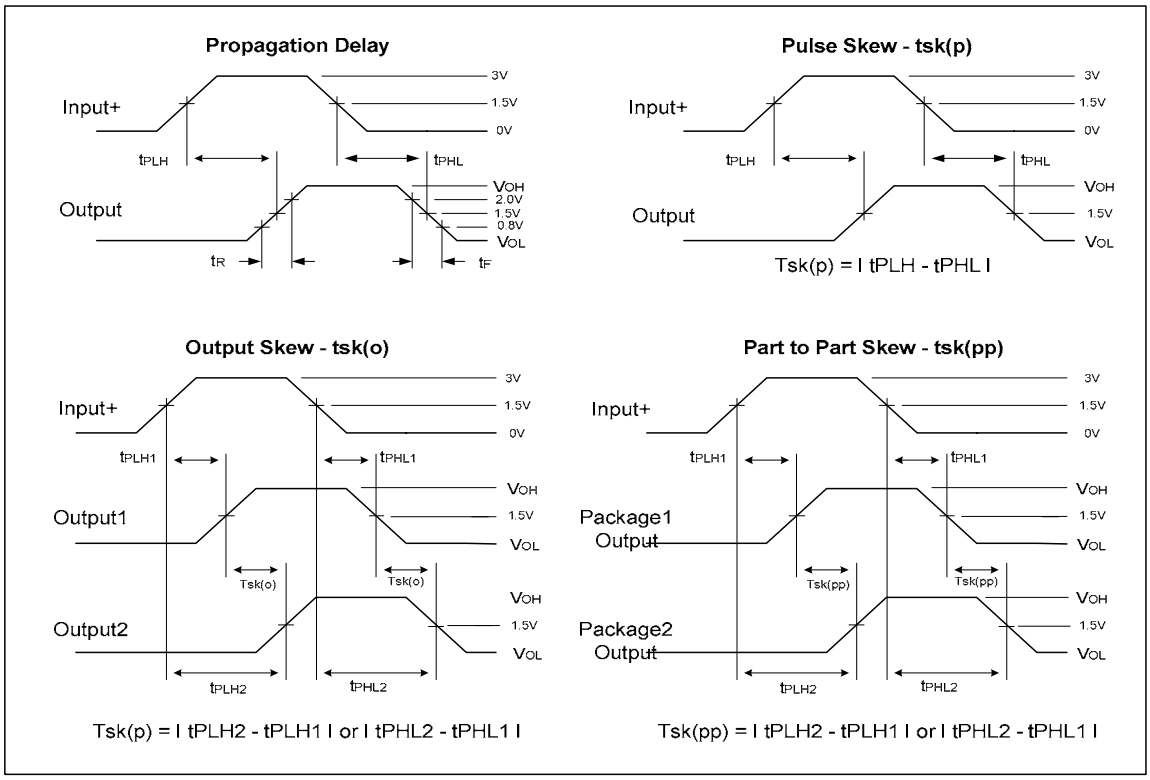

Test Circuit

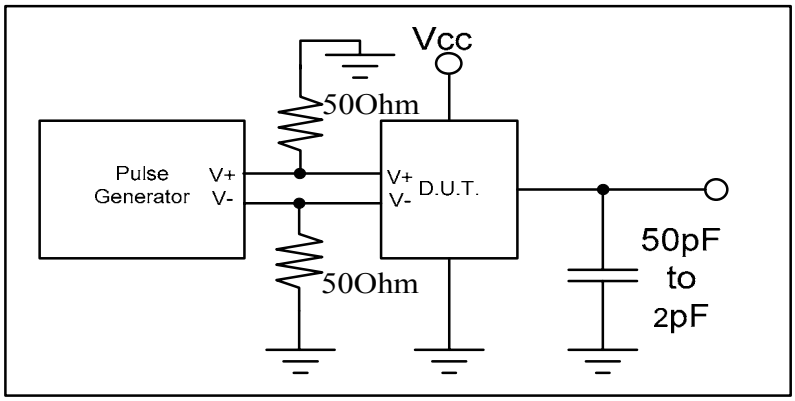

900MHz TTL/CMOS Potato Chip

Packaging Mechanical Drawing: 16 pin QSOP

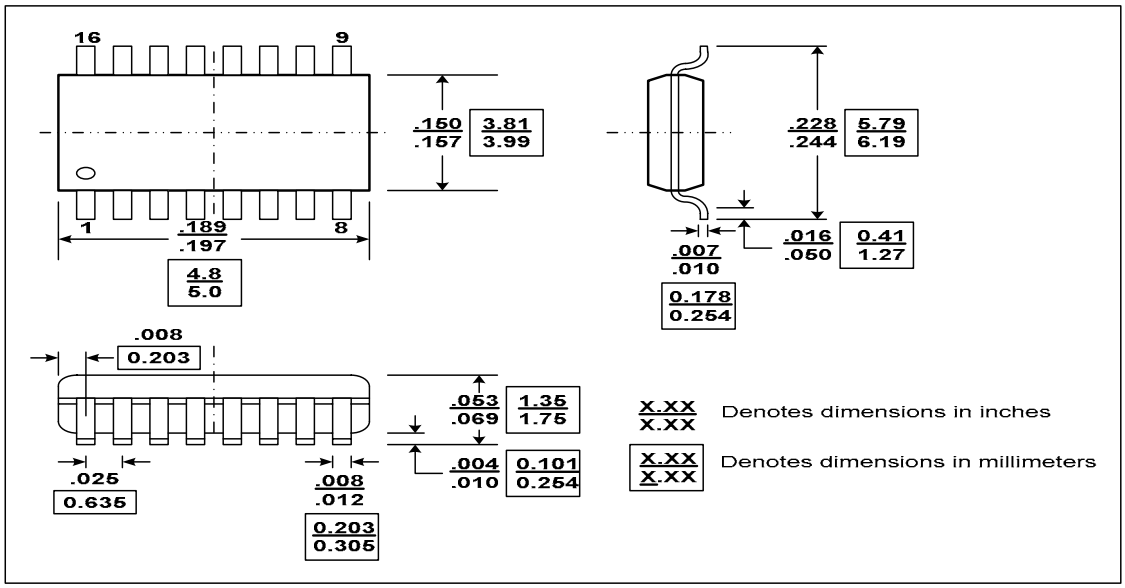

Packaging Mechanical Drawing: 16 pin TSSOP

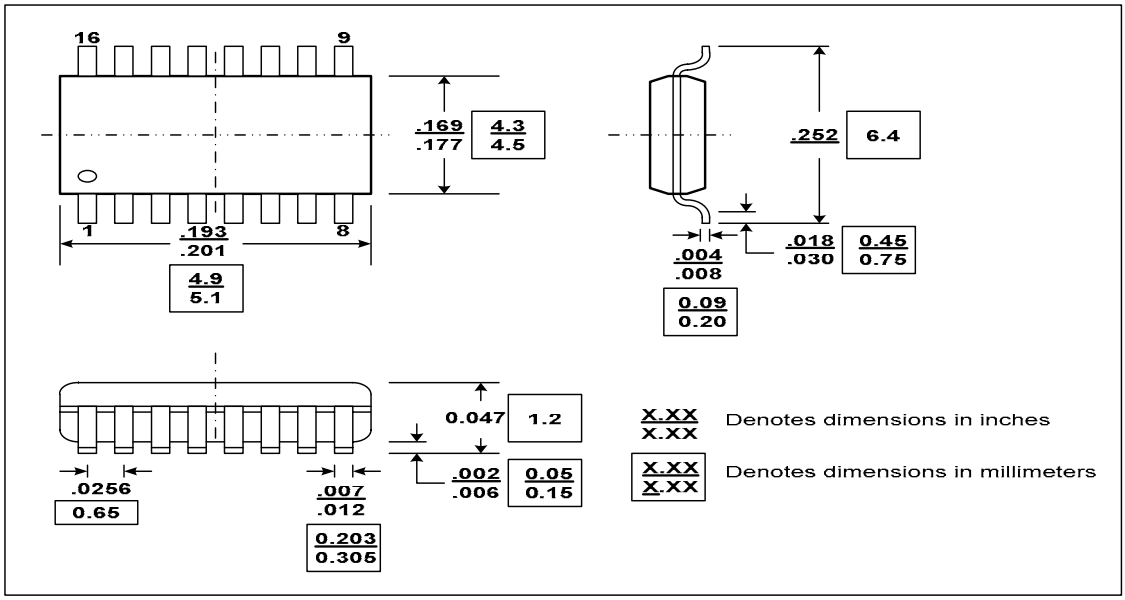

IC Ordering Information

Ordering Code	Package		Top-Marking	T_A
PO49HSTL3802AQU for Tube	16-pin 150mil QSOP	Pb-free & Green	PO49HSTL3802AQ	-40°C to 85°C
PO49HSTL3802AQR for Tape & Reel	16-pin 150mil QSOP	Pb-free & Green	PO49HSTL3802AQ	-40°C to 85°C
PO49HSTL3802ATU for Tube	16-pin 173mil TSSOP	Pb-free & Green	PO49HSTL3802AT	-40°C to 85°C
PO49HSTL3802ATR for Tape & Reel	16-pin 173mil TSSOP	Pb-free & Green	PO49HSTL3802AT	-40°C to 85°C

IC Package Information

PACKAGE CODE	PACKAGE TYPE	TAPE WIDTH (mm)	TAPE PITCH (mm)	TAPE & REEL PIN 1 LOCATION	TAPE TRAILER LENGTH	QTY PER TAPE	TAPE LEADER LENGTH	QTY PER TUBE
Q	16pin 150mil QSOP	12	8	Top Left Corner	39 (12″)	3000	64 (20″)	97
T	16pin 173mil TSSOP	12	8	Top Left Corner	39 (12″)	3000	64 (20″)	96